ORDER NO. VRD9202M108

Service Manual

Video Cassette Recorder

General Description
Adjustment Procedures
Block / Schematic Diagrams
Exploded Views / Parts List

Panasonic VHS
PAL NTSC 4.43

Hi-Fi HQ

NV-F77EG

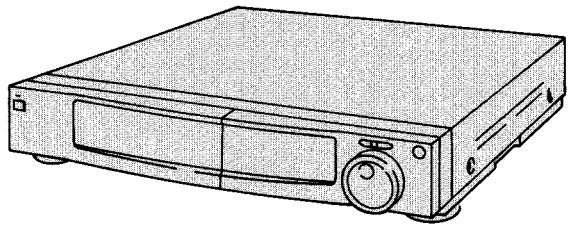

SPECIFICATIONS

ITEM	SPECIFICATION		
POWER	SOURCE: 220~240V 50/60Hz		
	CONSUMPTION: 34 watts		
RECORDING SYSTEM	2 rotary heads, helical scanning system		
	PAL/NTSC 4.43		
TV TUNER SYSTEM	GERMANY	VHF I: CHE2~CHE4 VHF III: CHS4~CHE12 VHF H: CHS11~CHS20 (PAL/SECAM B) 75Ω unbalanced UHF: CH21~CH69 (PAL/SECAM G) 75Ω unbalanced	
	ITALY	VHF I: CHA~CHH VHF III: CHS4~CHH2 VHF H: CHS11~CHS41 (PAL/SECAM B) 75Ω unbalanced UHF: CH21~CH69 (PAL/SECAM G) 75Ω unbalanced	
	OTHER COUNTRIES	VHF I: CHE2~CHS3 VHF III: CHM1~CHE12 VHF H: CHU1~CHS41 (PAL/SECAM B) 75Ω unbalanced UHF: CH21~CH69 (PAL/SECAM G) 75Ω unbalanced	
RF OUT SYSTEM	UHF: CH36±4 (PAL G) 76^{+2}_{-3}dBμ, 75Ω unbalanced		
VIDEO	HEADS: 4 rotary heads 1 pair for SP recording, playback and trick play (L-R heads) 1 pair for LP recording, playback and trick play (L'-R' heads)		
	INPUT: VIDEO IN (AV3) Connector (Phono type) 1.0Vp-p, 75Ω terminated EURO AV (AV1/2) Connector (21 pin×2) 1.0Vp-p, 75Ω unbalanced		

ITEM	SPECIFICATION
VIDEO	OUTPUT: EURO AV (AV1/2) Connector (21 pin×2) 1.0Vp-p, 75Ω unbalanced
AUDIO	HEAD: 1 Stationary head (Normal Audio) 2 rotary heads (Hi-Fi 2CH)
	INPUT: AUDIO IN (AV3) Connector (Phono type) More than −10dBV (316mV), more than 47kΩ EURO AV (AV1/2) Connector (21 pin×2) More than −6dBV (500mV) more than 10kΩ MICROPHONE JACK −70dBV
	OUTPUT: AUDIO OUT Connector (Phono type) −8dBV (400mV), Less than 1kΩ EURO AV (AV1/2) Connector (21 pin×2) −6dBV (500mV), Less than 1kΩ HEADPHONE JACK −30dBV, 8Ω
	TRACK: 1 track (Normal-mono only) 2 channels (Hi-Fi Sound-Stereo)
TAPE FORMAT	VHS Cassette tape (Tape width 12.7mm)
TAPE SPEED	SP: 23.39mm/s LP: 11.695mm/s Record/Playback Time: SP: 4 hours with 240min. type tape LP: 8 hours with 240min. type tape FF/REW Time 2.5min. with 180min. type tape
DIMENSIONS	430(W)×96(H)×374(D)mm
WEIGHT	6.0kg
STANDARD ACCESSORIES	1 pc. DIN-RE Cable 1 pc. Infra-red remote controller 2 pc. Audio Cables 1 pc. Programme sheet 1 pc. AC Mains Lead

Weight and dimensions shown are approximate.
Specifications are subject to change without notice.

Panasonic

INTRODUCTION

This service manual contains technical information which will allow service personnels to understand and service this model.
Section 1 presents you with some general information of features and controls, enabling you to become familiar with each function.
Section 2 contributes to your mechanical and electrical adjustment as well disassembly and replacement procedures.
In the case of very common information relating to other models like mechanical adjustments, please refer to each service manual.
Section 3 contains block diagrams which offers you information for checking and understanding each circuit. Schematic diagrams which give you detailed information such as waveforms, voltage data, function e.t.c...
Section 4 contains exploded views and parts list.
Please place orders using the parts list and not the drawing reference numbers.
If the circuit is changed or modified, this information will be followed by supplementary service manual to be filed with original service manual.

CONTENTS

SERVICE INFORMATION
SECTION 1
GENERAL DESCRIPTIONS 1-1

1-1. TECHNICAL INFORMATION 1-1
1-2. OPERATING INSTRUCTIONS 1-3

Setting Up
Connections 1-3
Tuning the TV into your VTR 1-4
Setting the Clock of the VTR 1-4
Storing TV Broadcasts into your VTR 1-5
Controls, Indicators and Connection Sockets 1-6
Infra-Red Remote Controller 1-9

Basic Operations
Playback 1-10
On-the-spot Recording 1-11
Automatic Features 1-12
One-Touch Timer Recording (OTR) 1-12

Additional Functions
Timer Recording 1-13
Search Function 1-15
Editing 1-16
Bar Code Operation 1-18

SECTION 2
ADJUSTMENT PROCEDURES 2-1

2-1. DISASSEMBLY METHOD 2-1
2-2. MECHANICAL ADJUSTMENT PROCEDURES 2-4
2-3. ELECTRICAL ADJUSTMENT PROCEDURES 2-7

SECTION 3
ABBREVIATIONS & BLOCK DIAGRAMS 3-1

3-1. ABBREVIATIONS 3-1
3-2. LUMINANCE & CHROMINANCE BLOCK DIAGRAM 3-5
3-3. Hi-Fi AUDIO BLOCK DIAGRAM 3-9
3-4. SYSTEM CONTROL & SERVO BLOCK DIAGRAM 3-13

SECTION 4
SCHEMATIC DIAGRAM 4-1

4-1. SYSTEM CONTROL & SERVO SECTION IN MAIN SCHEMATIC DIAGRAM 4-1
4-2. POWER SCHEMATIC DIAGRAM 4-8
4-3. LUMINANCE & CHROMINANCE SECTION IN MAIN SCHEMATIC DIAGRAM 4-10
4-4. AUDIO SECTION IN MAIN SCHEMATIC DIAGRAM 4-14
4-5. SUB SERVO PACK SCHEMATIC DIAGRAM 4-18
4-6. LUMINANCE & CHROMINANCE PACK SCHEMATIC DIAGRAM 4-21
4-7. S-VHS P.B. PACK SCHEMATIC DIAGRAM 4-24
4-8. INPUT/OUTPUT PACK SCHEMATIC DIAGRAM 4-27
4-9. HEAD AMP SCHEMATIC DIAGRAM 4-30
4-10. Hi-Fi AUDIO PACK SCHEMATIC DIAGRAM 4-32
4-11. TIMER & VR SCHEMATIC DIAGRAM 4-34
4-12. TV DEMODULATOR PACK SCHEMATIC DIAGRAM 4-39
4-13. DECODER PACK SCHEMATIC DIAGRAM 4-41
4-14. VPS PACK SCHEMATIC DIAGRAM 4-44
4-15. POWER C.B.A. 4-46
4-16. MAIN C.B.A. 4-48
4-17. LUMINANCE & CHROMINANCE PACK C.B.A. 4-51
4-18. S-VHS P.B. PACK C.B.A. 4-53
4-19. SUB SERVO PACK C.B.A. 4-54
4-20. HEAD AMP C.B.A. 4-56
4-21. INPUT/OUTPUT PACK C.B.A. 4-58
4-22. Hi-Fi AUDIO PACK C.B.A. 4-61
4-23. TIMER C.B.A. & VR C.B.A. 4-64
4-24. TV DEMODULATOR PACK C.B.A. 4-68
4-25. DECODER PACK C.B.A. 4-70
4-26. VPS PACK C.B.A. 4-71

SECTION 5
EXPLODED VIEWS & PARTS LIST 5-1

5-1. EXPLODED VIEW & MECHANICAL REPLACEMENT PARTS LIST 5-1
1. CHASSIS PARTS SECTION (1) 5-1
2. CHASSIS PARTS SECTION (2) 5-3
3. CASSETTE UP MECHANISM SECTION 5-5
4. CASING PARTS SECTION 5-6
5. PACKING PARTS SECTION 5-8
5-2. ELECTRICAL REPLACEMENT PARTS LIST 5-9

SERVICE INFORMATION

1-1. HOW TO CHECK THE CRACKED CHIP PART

(1) Apply heat to the soldered portions of chip part using a soldering iron for about 2–3 seconds.
(2) If the chip part is faulty,it will be broken or cracked.

Caution: Do not leave soldering iron on the PCB too long as damage may occur to the PCB or the chip parts.

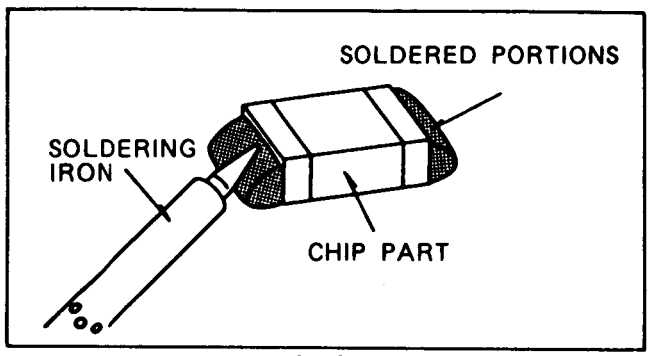

FIG. G1

Note: Regarding intermittent faults
The main causes of these faults are poor soldering and cracked chip parts.

1-2. HOW TO REPLACE THE CHIP PART

1) REMOVAL (RESISTOR, CAPACITOR, etc...)

(1) Presolder the one side of soldering portion for chip part and grasp the chip part by tweezers.

(2) Melt the presoldered portion. And then remove the chip part with a twisting motion while melting the soldering portion of another side quickly.

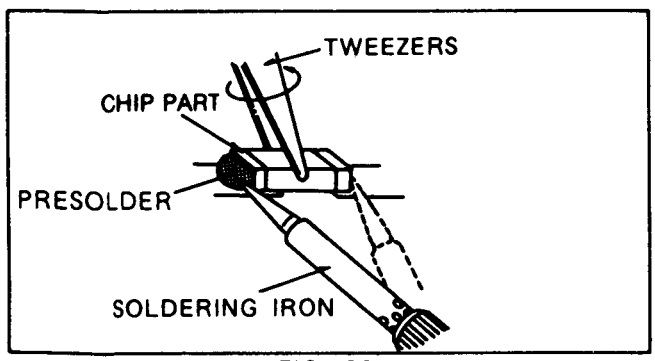

FIG. G2

2) REMOVAL (transistor, diode, etc...)

(1) Grasp the chip part with tweezers and melt the solder of one lead.

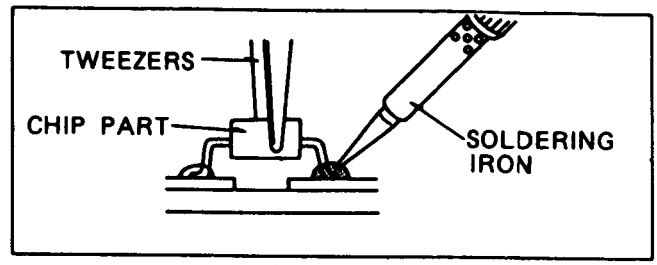

FIG. G3

(2) Lift the side of that lead upward.

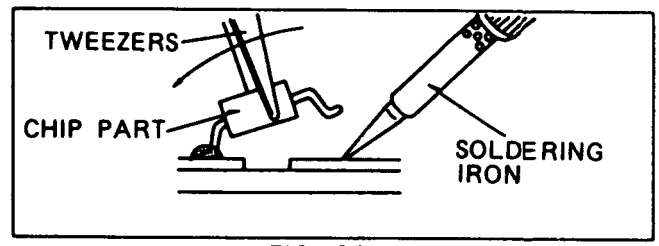

FIG. G4

Caution: Do not lift the chip part too high as damage may occur to the PCB or the leads that are still soldered on the PCB.

(3) Simultaneously heat the solder of the two remaining leads and lift part to remove.

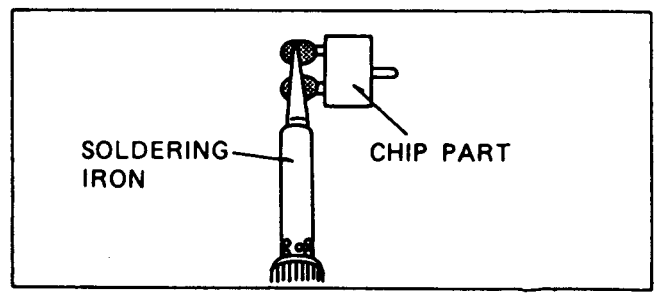

FIG. G5

3) INSTALLATION

(1) Presolder the one side of contact point on the circuit board.

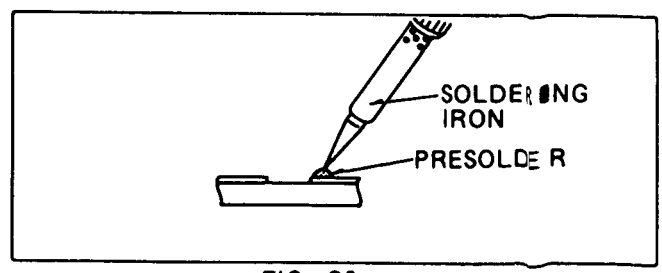

FIG. G6

(2) To install the chip part,hold in position using tweezers, apply heat to the pre-soldered portions using a fine tip soldering iron.
(3) Solder the other side of the chip part.
(4) Check your soldering.

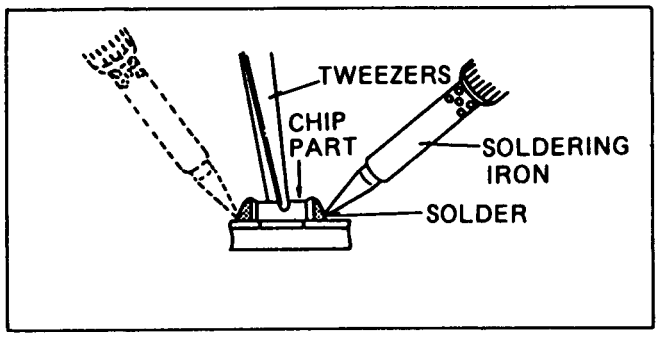

FIG. G7

1-3. HOW TO REMOVE THE FLAT-IC

(WITH HOT-AIR FLAT-IC DESOLDERING MACHINE)

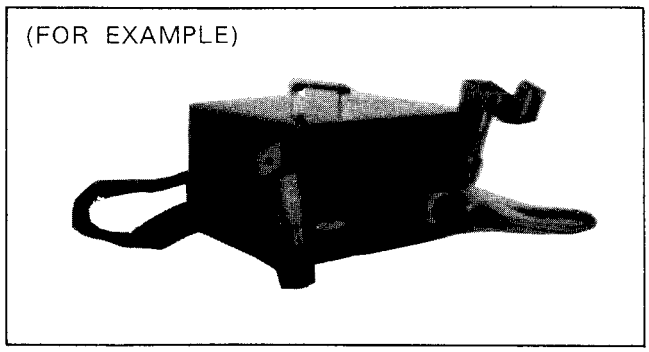

FIG. G8

(1) Prepare the HOT-AIR FLAT-IC DESOLDERING MACHINE. And then apply hot air to FLAT-IC about 5 ~ 8 seconds.

(2) Remove the FLAT-IC with tweezers while applying the hot air.

Caution: Do not supply the hot air to the chip parts around the Flat-IC for long time as as damage may occur to the chip parts around the Flat -IC.

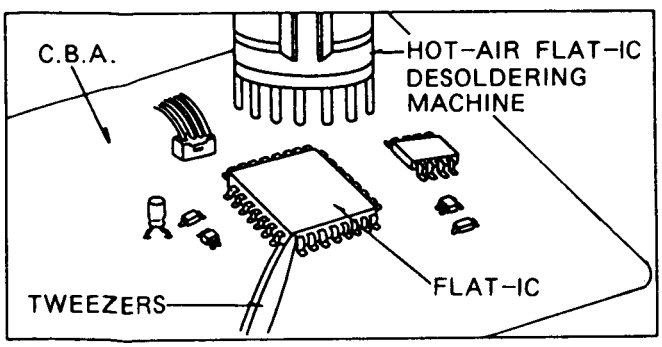

FIG. G9

(WITH SOLDERING IRON)

(1) Using solder braid remove the solder from all pins of the Flat-IC.
When you use the solder flux which is applied to all pins of the Flat-IC,you can remove it easily.

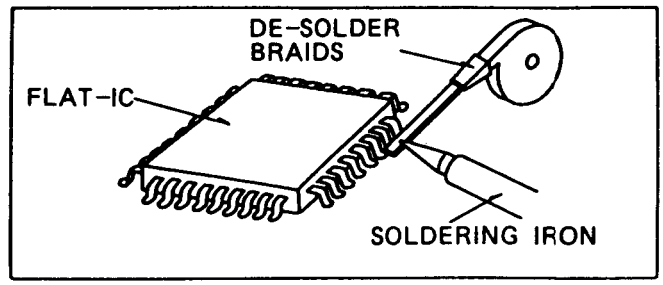

FIG. G10

(2) Lift each lead of the Flat-IC upward one by one using a sharp pin or non solder wire(iron wire),while heating the pins using a fine tip soldering iron or a hot air blower.

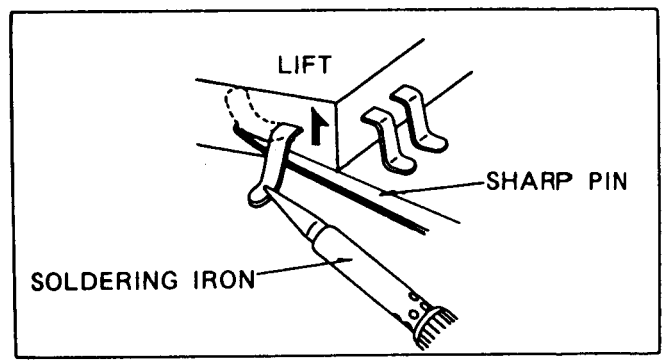

FIG. G11

(WITH IRON WIRE)

(1) Affix the wire to workbench or solid mounting point as shown in FIG.G12.
(2) Pull up wire as the solder melts so as to lift the IC lead from the PCB contact pad,while heating the pins using a fine tip soldering iron or hot air blower.

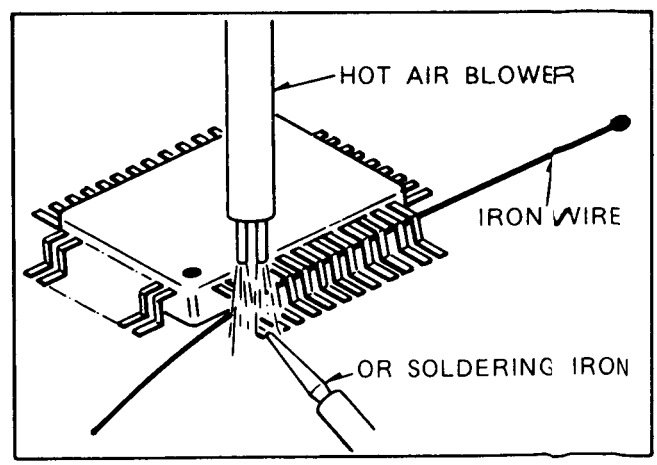

FIG.G12

Note: When using a soldering iron care must be taken to ensure that the Flat IC is not being held by glue before it is the PCB may be damaged if force is used.

SECTION 1
GENERAL DESCRIPTIONS

1-1. TECHNICAL INFORMATION

INITIALIZATION OF CHANNEL MEMORY IC (IC7505/M6M80021P)

When replace the channel memory IC (IC7505/M6M80021P), the memory IC should be initialized to keep formal specification.

Note:
1) It should be performed before tuner preset.
2) During initialization or after initialization within 1 second, do not stop the power source. (Do not disconnect AC cord.)
3) Meaning of "INITIALIZATION" is to erase the "SKIP CH". In another to say the number of POSITION CH and DISPLAY CH to be same.

Method:
1) Press the CH UP/DOWN Button so that the Channel indicator indicates "– –".
2) Connect the Diode (MA165) to Pin 54 of IC7501 for Anode, Pin 35 of IC7501 for Cathode twice.
3) Channel indication disappears, and approximately 3 seconds later Channel indicator indicates "1".

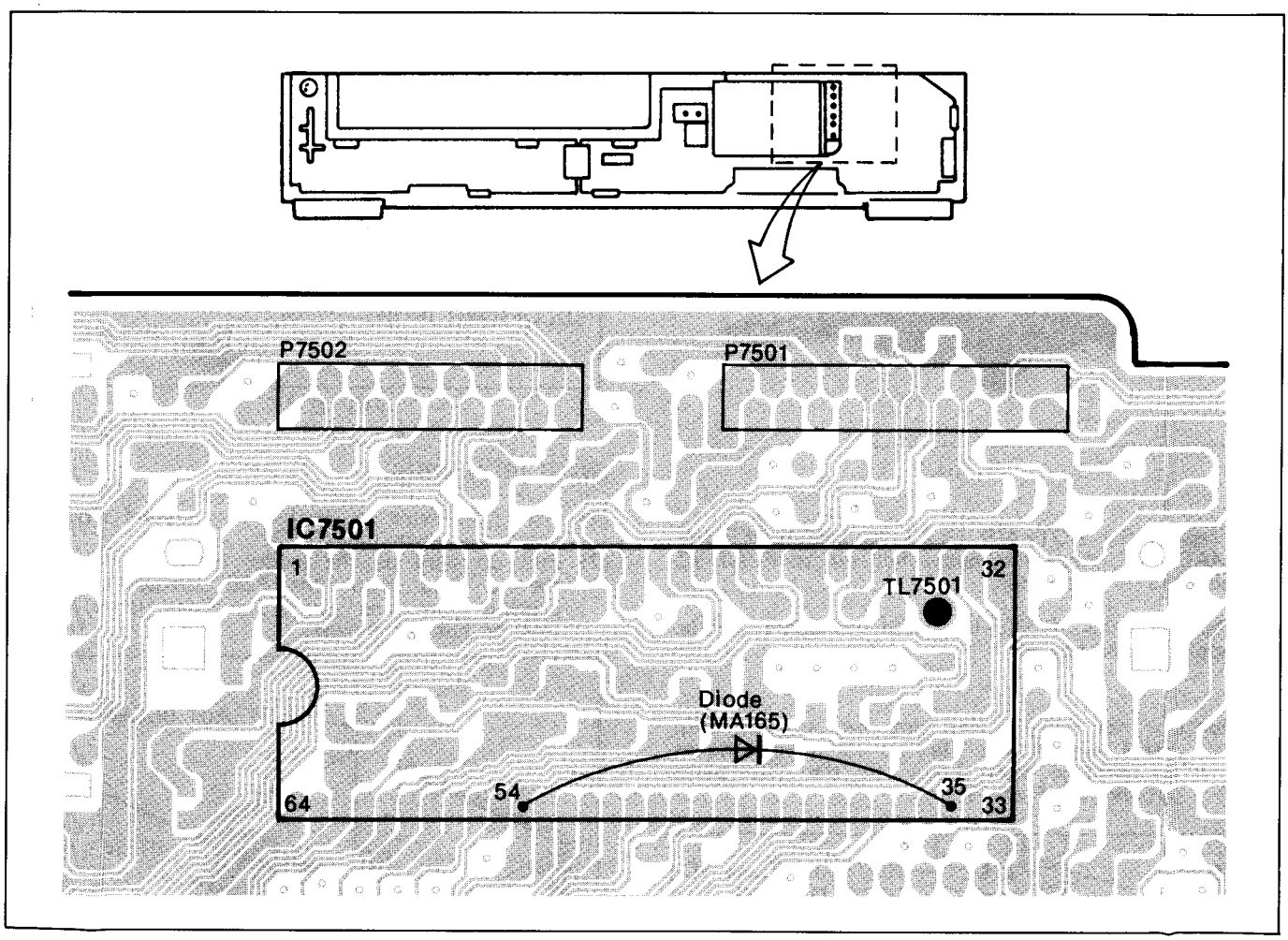

Fig. T1

SERVICE NOTE

When repairing without the top panel unit, Tape Select Switch must be set to the E195 position to prevent the malfunction of the Take-Up Photo Sensor.

SERVICE INFORMATION DISPLAY

This unit can be confirmed the mode information which is detected by microprocessor IC6001 via multi function display.

Method:

1) Press "EJECT", "FF" and "REW" keys at the same time.
2) The counter of multi function display indicates microprocessor data approximately 1 minutes as shown in Fig.T2.

Note:

1) This mode can be entred even when Power off.
2) Also it can be displayed the data when connect jumper wire between TP6001 and TPGND. (Press "EJECT", "FF" and "REW" keys at the same time, increment service number)

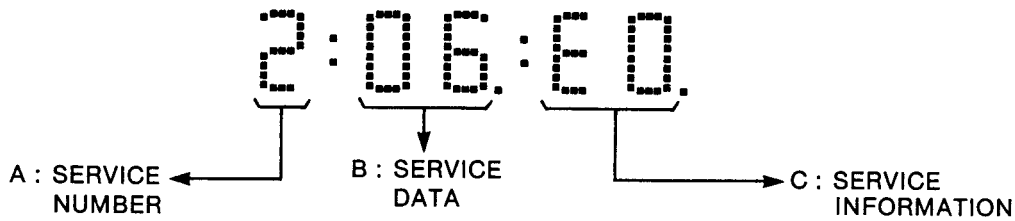

A: SERVICE NUMBER	B: SERVICE DATA	
1	*0 (hex)	can not detect Take-up and Supply Photo
	*9 (hex)	detect Take-up Photo
	*U (hex)	detect Supply Photo
	*3 (hex)	detect Take-up and Supply Photo
2	02 (hex)	EJECT
	03 (hex)	CASSETTE IN
	04 (hex)	CASSETTE DOWN
	06 (hex)	STOP 1
	08 (hex)	STOP 2
	0U (hex)	PLAY
3	L* (hex)	STOP 1 → STOP 2
	4* (hex)	PLAY → CUE/REV
	3* (hex)	STOP 2 → PLAY
	2* (hex)	STOP 1 → FF/REW
	1* (hex)	During Unloading
5	1*** **** (bin)	capstan motor ON
	**** 1*** (bin)	capstan motor reverse direction
6	***1 **** (bin)	cylinder motor ON

C : SERVICE INFORMATION

E0 : Normal
E1 : Cylinder lock (STOP)
E2 : Reel lock (STOP)
E3 : Rev Motor lock
E4 : Mechanism lock during unloading
E5 : Mechanism lock during mode transfer to FF or REW
E6 : Mechanism lock during front unloading (Cassette out)
E9 : Serial data (IC6001 – IC7501) can not be transmitted.

Note:

1. "*" : No meaning
2. "hex": hexadecimal digit
3. "bin" : binary digit

ex.

bin	hex
0000	0
0001	1
⋮	⋮
1010	U
1110	L

Fig. T2

Connections

•Connection to a TV Set with 21 Pin Scart Terminal

The Scart connection is optional but will be required to playback Hi-Fi stereo sound through a stereo TV. See page 1-8 for more detail.

The following connections are required to record and play back the VTR through a TV set:

1 Connect an external aerial to **RF IN**.

2 Connect **RF OUT** to the TV aerial connector (⊓⊓).

3 Connect the AC mains lead to the AC mains socket.

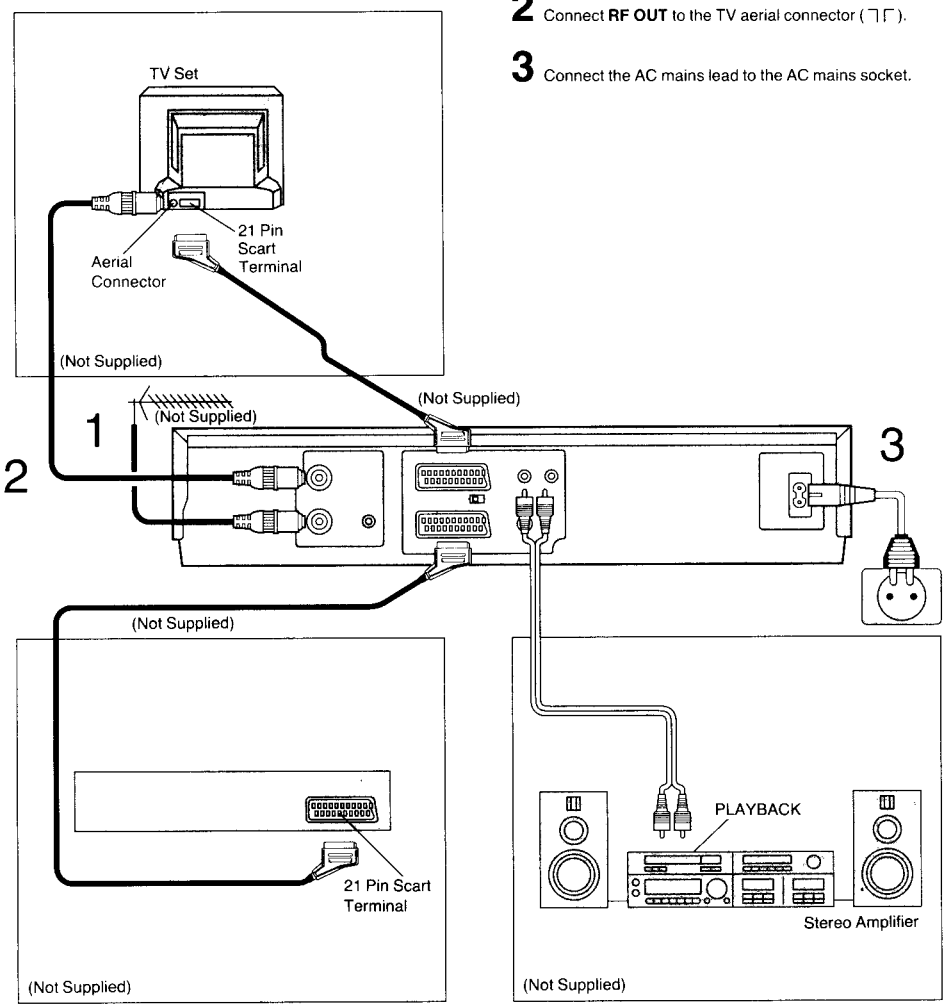

•Connection to a Satellite Receiver, etc.

•Connection to a Stereo Amplifier

•Connection to a pay TV decorder

Connect the TV set decoder to the VTR as shown in the figure.
One decoder can be used both for the VTR and TV.

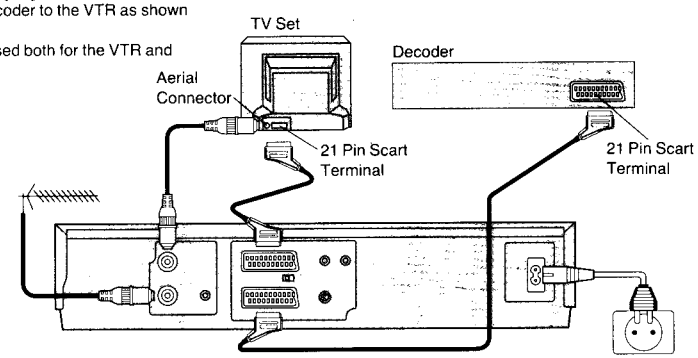

Note:
- If the TV set is provided with an RGB-compatible connector, connect the 21-pin AV cable from the VTR to this connector. Use full-pin 21-pin AV cables for connecting the TV set and VTR and for connecting the VTR and decoder.

AV LINK

With this button the connected colour TV set can be switched from TV to AV operation.
Condition: connection by means of Scart cable, and reaction to switching voltage as for PLAY function.
This makes a variety of functions possible, such as simultaneous recording and viewing when a "Premiere" decoder or a satellite receiver has been connected.

Enjoying sound and pictures from the VTR
VTR mode (VTR indicator lights)

Watching another program on the TV while recording on the VTR
TV mode (VTR indicator goes off)

- Select the program to be watched using the TV set's tuner.
- The sound and pictures of a different channel are received by the VTR.

VTR		TV set
Power ON	VTR mode	AV input selected
	TV mode	Input from TV set's tuner*
Power Off	——	Input from TV set's tuner

*When the VTR is set to the TV mode and the VTR to the pay TV (channels 90 to 99) mode, the signals will still be scrambled even when pay TV is selected by the TV set's tuner. At a time like this, either set the VTR to the VTR mode or switch the TV set's input signals to AV input.

Tuning the TV into your VTR

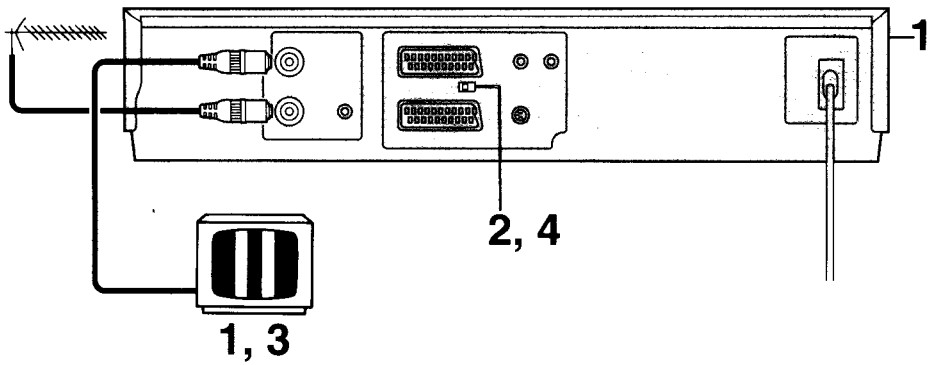

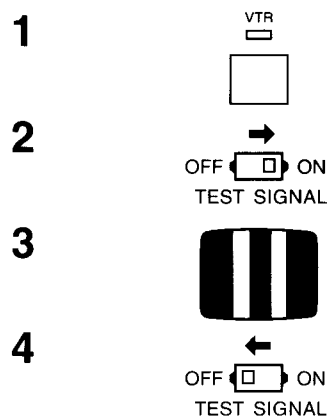

It is possible to view the video picture on your TV in the same way as you watch TV broadcasts.

If you are connecting the video to the TV by the use of the 21 pin scart terminal then you do not need to follow the procedure mentioned below. See page 1-3.

Operations

1 Turn the TV on. The VTR should also be turned on by pressing **VTR** on the front panel of the video.

2 To generate a test pattern, set the **TEST SIGNAL** located on the rear of the video to ON.

3 Set the TV to a free station number which you wish to use for your video playback i.e. station 5.
Follow the tuning procedure for your TV until you can view the TEST BARS.

4 After tuning the test bars into the TV, set **TEST SIGNAL** to OFF.
Station 5 is now your video channel.

Note:
The TEST signal is transmitted on channel 36 of the broadcasting channels. If you are encountering interference from another broadcast on the video channel, you may readjust to a free channel by using the **CH ADJ.** screw which is located on the rear of the VTR.

Please note that if the **CH ADJ.** screw is used then you will have to return your TV to the TEST signal as in item 2 to 4 above.

Setting the Clock of the VTR

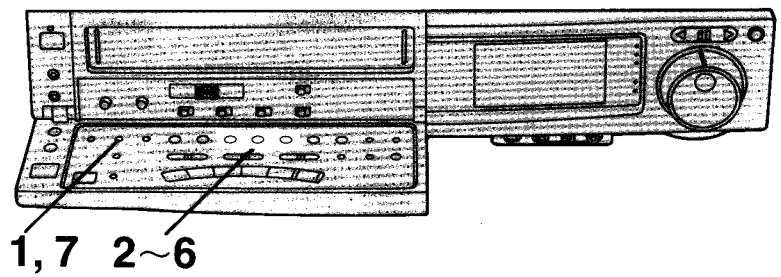

For Example: Set the clock for Sunday, October 10, 1999, 20:15.

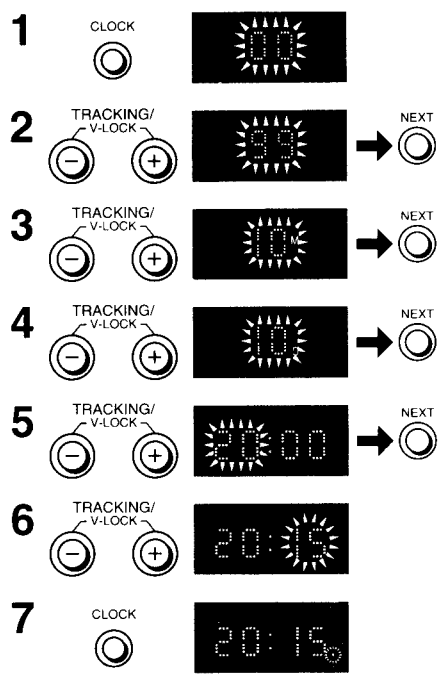

In addition to setting the VTR clock from the remote controller, it can also be set directly from the VTR.
The built-in digital clock employs the 24-hour system.

Preparation

Turn ON the VTR.

Operations

1 Press **CLOCK**.

2 Set the year by pressing **TRACKING/V-LOCK** + or −, and then press **NEXT**.

3 Set the month by pressing **TRACKING/V-LOCK** + or −, and then press **NEXT**.

4 Set the date by pressing **TRACKING/V-LOCK** + or −, and then press **NEXT**.

5 Set the hour by pressing **TRACKING/V-LOCK** + or −, and then press **NEXT**.

6 Set the minute by pressing **TRACKING/V-LOCK** + or −.

7 To start the clock from this setting, press **CLOCK**.

Note:
The clock operates for at least 60 minutes, by its back up system in the event of power failure.

Storing TV Broadcasts into your VTR

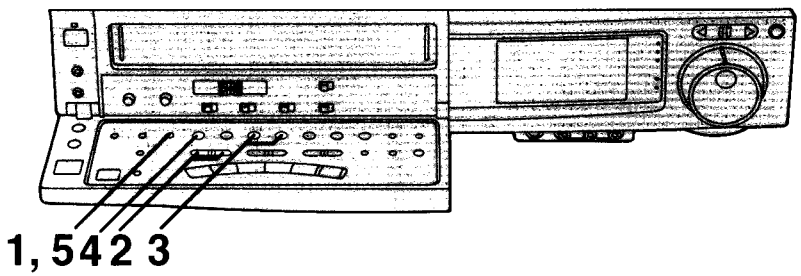

For example:
Set the programme position.

1 PRESET/FINE/NORMAL

2

3 TRACKING/V-LOCK

4 PROG/CHECK

5 PRESET/FINE/NORMAL

Note:
While tuning, your video may lock onto several weak stations from distant transmitters. Should this occur press TRACKING/V-LOCK (−) or (+) again until a strong station is received.

Introduction

The VTR is fitted with its own tuner (just like a normal TV set) and can be pre-set to receive up to 99 TV broadcast stations.

Preparation

Confirm the TV is on and the VTR viewing channel is selected.

Operations

1 Press the **PRESET/FINE/NORMAL**.

2 Select programme position 35 for tuning by using ∨ ∧.

3 To search for the TV station press **TRACKING/V-LOCK** + or −. If the required TV broadcast is not displayed, again press + or −.

4 Select the broadcasting system for the TV station tuned, by using **PROG/CHECK**.
In the Display, "1" (PAL) or "2" (MESECAM) will be displayed.
- 1 (PAL) ..... For receiving PAL system broadcasts
- 2 (MESECAM) ..... For receiving SECAM system broadcasts
  The MESECAM Indicator Lamp lights up.

Repeat steps 2~4 for each channel you want to tune to a station.

5 Once all the broadcast stations are memorized into their appropriate station positions, press **PRESET/FINE/NORMAL** once again to set the VTR to normal operative mode.

Fine Tuning Procedure

1 Press **PRESET/FINE/NORMAL** twice.

2 Press **TRACKING/V-LOCK** + or − to obtain the best tuning condition.
- "AFC" Indicator will not be displayed.
- To return the tuning to its former state, press **AFC/VPS**.

3 Press **PRESET/FINE/NORMAL**.

Blanking of Unoccupied Programme Positions

1 Press **PRESET/FINE/NORMAL**.

2 Select a programme position which you do not want to tune to a TV station, by using ∨ ∧.

3 Press **CLEAR** ("– –" will be displayed in the Programme Position Indication).
- Repeat steps 2 and 3 for any programme positions on which no stations are to be tuned. Afterwards, these programme positions will be skipped during Up/Down selection of the programme position.
- To cancel the blanking of a programme position, select that programme position on the VTR and then press **CLEAR**.

4 Press **PRESET/FINE/NORMAL** twice.

Channel Indication	TV Channel	
	Germany/Italy	Other Countries
2–12	*E2–E12	E2–E12
13–20	A–H (Only Italy)	—
21–69	21–69	21–69
74–76	—	S1–S3
80–82	—	M1–M3
83–89	S4–S10	M4–M10
90–99	S11–S20	U1–U10
121–141	(8 MHz) Hyperband	S21–S41

*In Italy: H1...(11), H2...(12)

On the programme positions (channels) 1–89, normal TV stations can be preset.
On the programme positions (channels) 90–99, DBS stations can be preset, such as Pay TV (Premiere).
Descramble operation is possible only for these programm positions.

Controls, Indicators and Connection Sockets

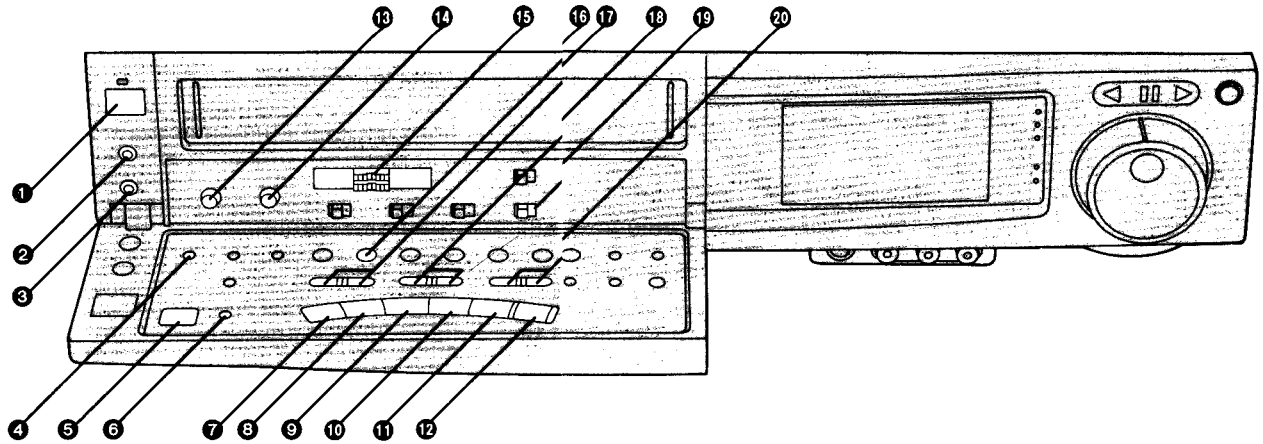

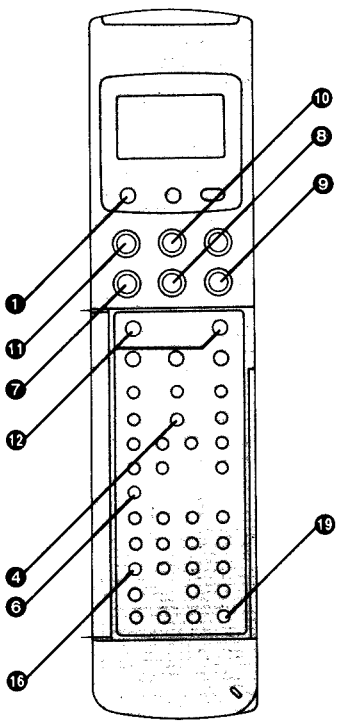

Basic Controls

❶ **VTR (Video Cassette Recorder On/Off)**
The VTR is turned on and off by pressing this button. The indicator on the button is lit when the VTR is on.
- The VTR is also automatically turned on if a cassette tape is inserted.
- The VTR is also temporarily turned on if EJECT is pressed to eject a cassette tape. In this case, it is automatically turned off afterwards.

❷ **MIC**
Connect a microphone to this socket for recording. Then, this socket has priority.

❸ **PHONES**
For connecting stereo headphones.

❹ **AV LINK**
Press this button to select the VTR mode or TV mode for AV LINK.

❺ **EJECT**
Press this button to eject the cassette tape.

❻ **AUDIO OUT**
Press this button to select the desired sound tracks. Each press of this button changes the selected sound tracks as follows:
Hi-Fi stereo (L and R)—Hi-Fi mono left (L)—Hi-Fi mono right (R)—Normal (Hi-Fi off)...Hi-Fi Stereo...

❼ **REW (REWIND)**
Press this button once when the tape is stopped to rapidly rewind it. For short Review playback (during normal playback), keep the button pressed for as long you want the tape to be played back at high speed in reverse direction. For longer Review playback (during normal playback), quickly press the button to start the Review playback "◁◁" is lit.
Hold down the button while the tape is rapidly rewinding to monitor the picture at high speed in the reverse direction.

❽ **PLAY**
Press this button to start playback. "▷" is lit.

❾ **FF (FAST FORWARD)**
Press this button once when the tape is stopped to rapidly wind it forward. For short Cue playback (during normal playback), keep the button pressed for as long you want the tape to be played back at high speed in forward direction. For longer Cue playback (during normal playback), quickly press the button to start the Cue playback.
"▷▷" is lit.
Hold down the button while the tape is winding toward to monitor the picture at high speed in the forward direction.

❿ **STOP**
Press this button to stop any playback or recording.

⓫ **PAUSE/STILL**
Press this button to stop the tape temporarily during playback and recording. Pressing the button again releases the pause.
If pressed during playback, a still picture is shown and "❚❚" is lit.
- If the pause is not released within 5 minutes, the VTR will automatically switch to the STOP mode to protect the tape and the video heads.

⓬ **REC**
Press this button on the VTR to start a recording. The two recording buttons on the remote controller have to be pressed together for the same function. "▷ REC" is lit.

⓭ **PHONES LEVEL**
For adjusting the volume level of connected stereo headphones.

⓮ **PICTURE**
Use this control to adjust the sharpness of the picture. It becomes softer when the control is turned to the left, and sharper when turned to the right.

⓯ **Hi-Fi REC LEVEL**
Use this control for adjusting the recording level to peak at +4 dB on the recording level indicator.

⓰ **RECORDING SP/LP**
Press this button to select the tape speed required for recording.
SP gives the best picture quality.
LP gives the longest recording time.
This needs only to be set for recording since the VTR automatically selects the correct speed for playback.

⓱ **∨ ∧**
Press these buttons to select the required TV station. The VTR can handle up to 99 stations.

⓲ **OTR ON (ONE-TOUCH TIMER RECORDING)**
Press + or − to set the OTR starting time. "OTR" and "ON" are lit. A single push changes the time in 1-minute steps, and holding down either button changes the time in 10-minute steps.

⓳ **REMOTE MODE (VTR 1/2)**
VTR 1: Set at this position on both the VTR and remote controller for normal use with one VTR.
VTR 2: Set at this position when using two Panasonic VTRs.
This allows the remote controller to be set for operating VTR 1 or VTR 2.

⓴ **OTR OFF (ONE-TOUCH TIMER RECORDING)**
Press + or − to set the OTR ending time. "OTR" and "OFF" are lit. A single push changes the time in 1-minute steps, and holding down either button changes the time in 10-minute steps. The OTR OFF buttons must be first pressed within 8 seconds after the OTR starting time has been set, otherwise the starting time will be cancelled.

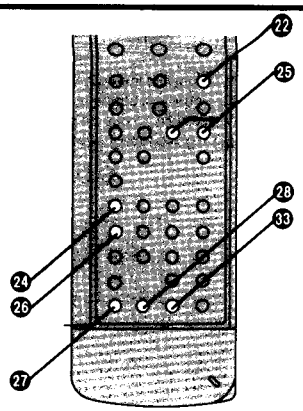

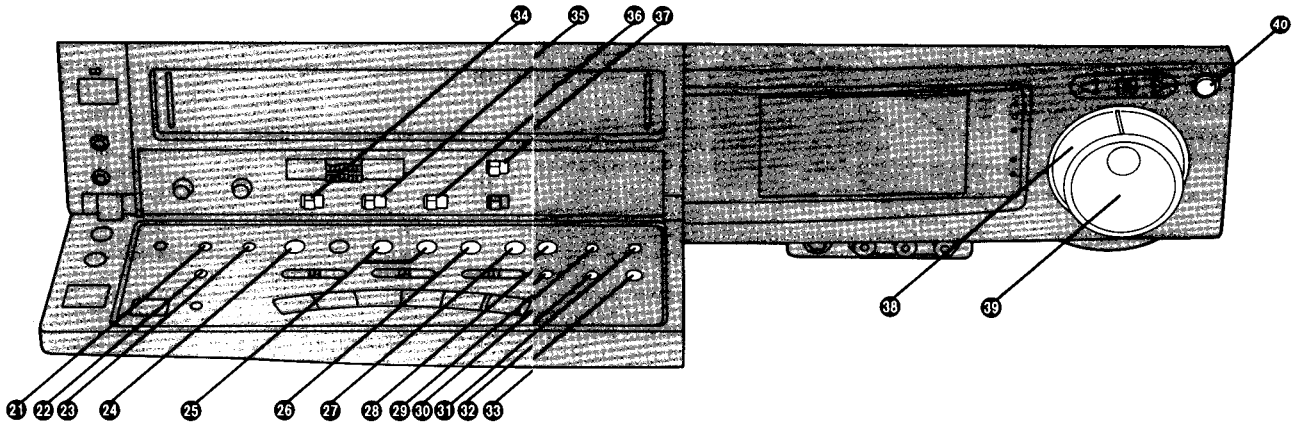

Additional Controls

㉑ **CLOCK**
Press this button to initiate date and time settings. After the time has been entered correctly, this button is pressed again to memorize the setting.

㉒ **RESET**
To reset the tape counter (elapsed time) to "0:00.00".
●The Tape Counter is automatically reset to "0:00.00" when the video cassette is inserted.

㉓ **PRESET/FINE/NORMAL**
Press this button to initiate TV station settings for the tuner.

㉔ **PROG/CHECK (PROG)**
This button is used to select the programme number for timer recording. Number "1, 2, 3... or 8" is lit. The button is also used to display details of a preset timer recording.

㉕ **TRACKING/V-LOCK**
For manual tracking adjustment
The + and − buttons are used to adjust the tracking when, for example, noise bars on the picture are better removed manually than by the automatic digital tracking control. After making a manual adjustment, press both buttons together to return to automatic digital tracking control.
Manual tracking adjustment is sometimes necessary to reproduce good Hi-Fi sound and picture quality when playing back tapes that have been recorded on another VTR.

For slow tracking adjustment
When noise bars appear during Super Still, Super Still Advance or Super Fine Slow playback, switch over to slow playback and adjust with the "+" or "−" Button to reduce the noise bars.

For vertical locking adjustment
Use the + and − buttons to minimize any vertical jitter during still-picture playback.

For setting the clock and timer recording
(Remote controller: No function)
These buttons are also used for selecting the different time units when setting the clock to the present time, and for setting the data necessary for timer recording.

㉖ **NEXT**
Press this button to memorize preset data and to change to the next variable when setting the clock or timer. At each push, the flashing indication on the date display changes in the order YEAR, MONTH, DATE, HOUR, MINUTE.

㉗ **TIMER REC**
This button used to set the VTR for timer recording. When set for timer recording, "⏲" is lit, and the VTR will turn itself on automatically to begin recording at the preset time, even if it has been turned off by the ON/OFF button.
The VTR can only be operated manually when the timer recording function is off. Timer recording can be set whether the function is on or off, but recording will only be performed when the function is on.
If the timer recording function is on, but no video cassette is inserted or no timer recording has been programmed, the "⏲" will flash to warn that timer recording cannot be performed.

㉘ **CANCEL**
Press this button to cancel the settings made for a timer recording.

㉙ **AUDIO DUB**
Press this button to set up the VTR for audio dubbing.

㉚ **AFC/VPS**
The VPS function for timer recording can be cancelled or activated again.
After performing manual fine tuning of a TV station, resetting to automatic tuning is possible.

㉛ **INSERT**
Press this button to set up the VTR for insert editing.

㉜ **CLEAR**

㉝ **PAL/MESECAM**
This button should be set according to the colour TV system used during recording and playback.
When the MESECAM Indicator is lit, the MESECAM system is selected.

㉞ **NOISE FILTER/EDIT**
OFF: Set at this position for normal use of the VTR.
EDIT: Set at this position for editing operations (of dubbing the tape). The picture sharpness cannot be adjusted in this setting.
NOISE FILTER ON:
Use this setting when playing back tapes with inferior picture quality that could be caused, for example, by repeated dubbing.

㉟ **Hi-Fi/NORMAL MIX**
Sound is recorded on both the Hi-Fi and normal sound tracks.
OFF: Normally set at this position to reproduce the better sound available from the Hi-Fi track.
ON: Both sound tracks are played back mixed together. Use this setting when playing back a cassette tape which has been insert edited or audio dubbed.

㊱ **NTSC 4.43**
OFF: Normally set at this position, even when playing back NTSC system tapes.
ON: Only set at this position to dub NTSC system tapes.
This setting is needed on both the recording and playback VTR.

㊲ **TAPE SELECT**
Set this switch according to the cassette tape being used so that the remaining tape time is indicated correctly.

~E195: For -E30, -60, -80, -120, -180 and -195 tapes.
E240: For -E240 tape.
E260: For -E260 tape.

㊳ **Shuttle Ring**
With the Shuttle Ring, the playback speed can be adjusted step by step in both forward and reverse directions.

㊴ **Jog Dial**
The Jog Dial makes it easy to locate any desired frame with utmost precision.

㊵ **Jog/Shuttle**
Press this button to switch over to the jog and the shuttle operation.

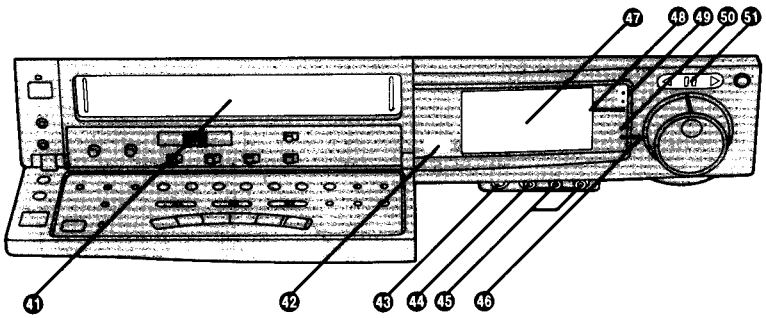

41 Cassette Compartment

42 Infra-red Remote Control Receiver Window
Receives the signals from the remote controller.

43 SYNC. EDIT
Connecting to a VHS/VHS-C Movie equipped with Synchro Edit Function.

44 VIDEO IN (AV3)
For connecting the video cable of a video camera or a second video recorder.

45 AUDIO IN (AV3)
For connecting the audio cable(s) of a video camera, a hi-fi stereo system or a second video recorder.

46 Audio Dubbing Indicator

47 Multi-Function Display

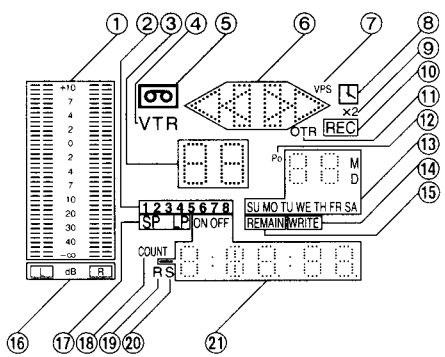

① Audio Level Meter
② Timer Programme Number
③ Channel Display
④ VTR Indicator
⑤ Cassette-in Indicator
⑥ Tape Running Display
⑦ VPS Indicator
⑧ Timer Recording Indicator
⑨ Double Speed Indicator
⑩ Recording Indicator
⑪ OTR Indicator
⑫ Position Indicator
⑬ Date Display
⑭ Write Indicator
⑮ Remaining Tape Time Indicator
⑯ Audio Output Mode Indicators
⑰ Tape Speed Indicator
⑱ Counter Mode Indicator
⑲ Repeat Indicator
⑳ Search Indicator
㉑ Clock/Counter Display

48 MESECAM Indicator

49 Indicator Lamps for Bilingual and Stereo Reception
When receiving a TV programme, the type of sound system in which it is broadcast is automatically indicated.

50 Insert Editing Indicator

51 Jog/Shuttle Indicator
This indicator lights up when the Jog/Shuttle Button is pressed.

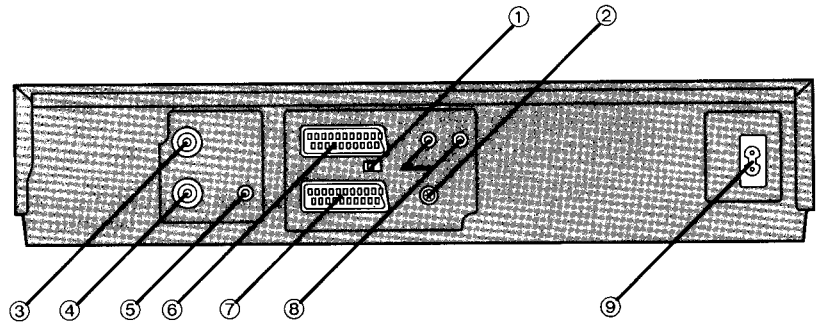

Rear Panel

① **TEST SIGNAL**
The test signal is transmitted on channel 36.

② **EDIT**
By connecting the optional Editing Controller (VW-EC300E/VW-EC310E) to this socket, such editing functions as Assemble Editing, Insert Editing and Audio Dubbing can be performed more quickly and efficiently between two VTRs or between a VTR and a camera recorder.

③ **RF OUT**
Use this to connect to the aerial terminal on a TV set.

④ **RF IN**
Use this to connect an external aerial.

⑤ **CH ADJ.**
Tape playback picture, etc. is viewed on channel 36 but if it is occupied by local station, channel assignment can be adjusted in the range of ±4 ch.

⑥ **AV1**
This 21 pin scart terminal carries input and output signals for both picture and sound. TV sets equipped with a similar socket can be connected here.

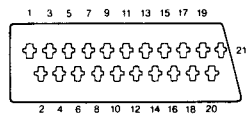

1 AUDIO OUTPUT CH2 (R)	11 GREEN
2 AUDIO INPUT CH2 (R)	12 No connection
3 AUDIO OUTPUT CH1 (L)	13 RED GND
4 AUDIO GND	14 BRANKING GND
5 BLUE GND	15 RED
6 AUDIO INPUT CH1 (L)	16 BLANKING
7 BLUE	17 VIDEO OUTPUT GND
8 SWITCHING VOLTAGE	18 VIDEO INPUT GND
9 GREEN GND	19 VIDEO OUTPUT
10 No connection	20 VIDEO INPUT
	21 GND

⑦ **AV2**
This 21 pin scart terminal carries only input signals for both picture and sound.

⑧ **AUDIO OUT**
Use these to connect the sound to a stereo audio system.

⑨ **AC IN~**

Infra-Red Remote Controller

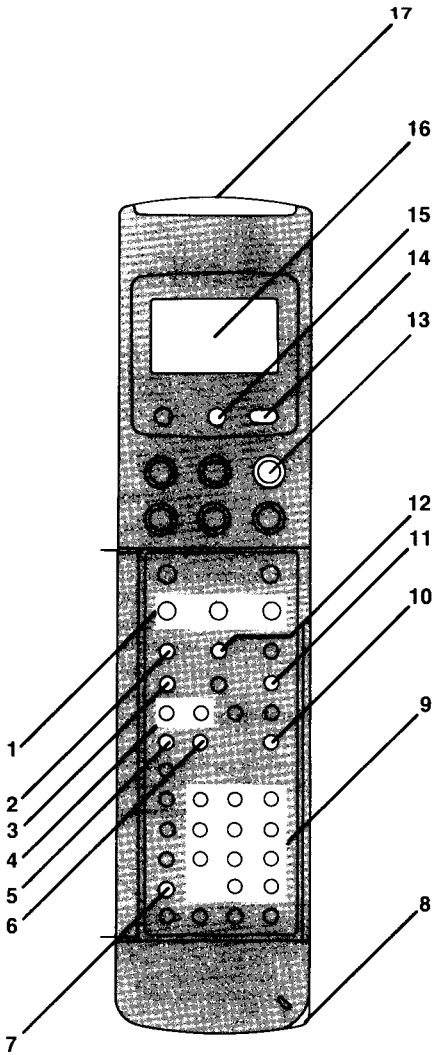

Infra-Red Remote Controller

1 SEARCH
Press the Search Button to activate the Search Function, and the VTR changes over to the Still Playback mode.
When the "+" Button is now pressed once, the tape will be played back at 1/30th of normal playback speed. At every further press of the "+" Button, the playback speed will be increased step by step.
- By pressing the "−" Button, the playback speed can be changed in the reverse direction (Still Playback—Reverse Slow Motion Playback—Reverse Playback—Double Speed Reverse Playback—Review Playback).

2 CLOCK/COUNTER
This button is used to switch between the display of the clock and the tape counter.
The numbers on the tape counter only change for recorded segments of the tape.

3 MONITOR
Keep this button depressed during playback to watch TV broadcast.
- When the VTR is connected to the TV set via 21 pin scart cable, this function does not work.

4 INDEX
For the index search function.

5 REPEAT
For the Repeat Playback function.

6 ZERO STOP
For the ZERO STOP function.

7 VPS
The Video Programme System (VPS) is a very convenient system which assures that the TV programmes you have programmed for timer recording will be recorded exactly from beginning to end, even if the actual broadcasting time differs from the scheduled time due to delayed start or extension of the programme duration. Also, if a programme is interrupted and, for example, some special news are inserted, the recording will also be interrupted automatically and resumed when the programme continues.

8 Bar Code Reading Section
After the Bar Code Reader is turned on, the tip lights in red.

9 Ten Key
- for selecting the programme positions

9: MO-SA (9)▶
19: (-/--) → SU (1) → MO-SA (9)▶

- for the Timer Search function
- for the Index Search function
- for programming of timer recording

10 TIME SEARCH
For the time search function.

11 INPUT SELECT
Press this button to select the A1 ~ A3 external recording source.
A1: Through the 21 pin AV1 socket.
A2: Through the 21 pin AV2 socket.
A3: Through the Audio Video IN3 sockets. (AV3)

12 TAPE REMAIN
Press this button during playback or recording to have the approximate remaining tape time displayed.
"REMAIN" is lit while the remaining tape time is displayed.
- When using a VHS-C videocassette in this VTR, the remaining tape time indication may not be correct or this indication may not appear at all.

13 STILL ADV
Press this button during still playback. Each time you press this button, the still picture is advanced.

14 TRANSMIT
Press this button to transmit to the VTR data that has been set on the remote controller by either manual means or by bar codes.

15 SCANNER ON/OFF
To turn the Bar Code Reader on and off.

16 Display

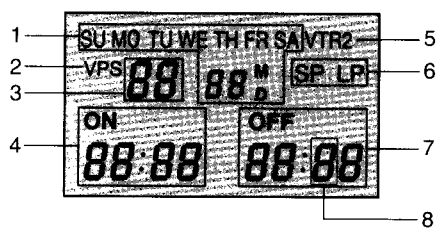

1	Date Display	5	Remote Control Mode Indicator
2	VPS Indicator	6	Tape Speed Indicator
3	Programme Position Display	7	End Time Display
4	Start Time Display	8	Check Indicator

17 Infra-red Transmitter
The programming data are transmitted from here to the VTR.

Power source for the remote controller
The remote controller is powered by 2 UM3 or R6 size batteries. The life of the batteries is about one year, although this depends on the frequency of use.

Precautions for battery replacement
- Load the new batteries with their polarity (+ and −) aligned correctly.
- Do not apply heat to the batteries, or an internal short-circuit may occur.
- If you do not intend to use the remote controller for a long period of time, remove the batteries and store them in a cool and dry place.
- Remove spent batteries immediately and dispose of them.
- Do not use an old and a new battery together, and never use an alkaline battery with a manganese battery.

Loading the batteries

Remove the battery compartment lid.

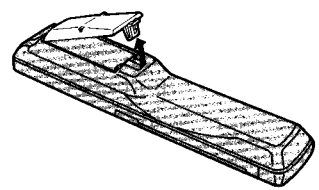

Place the batteries in the battery compartment according to the polarity indicated inside the battery compartment.

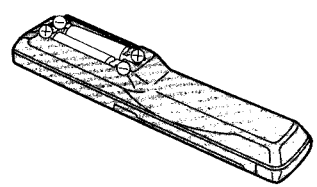

Replace the lid.

Playback

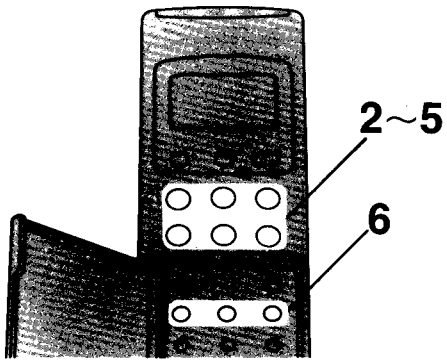

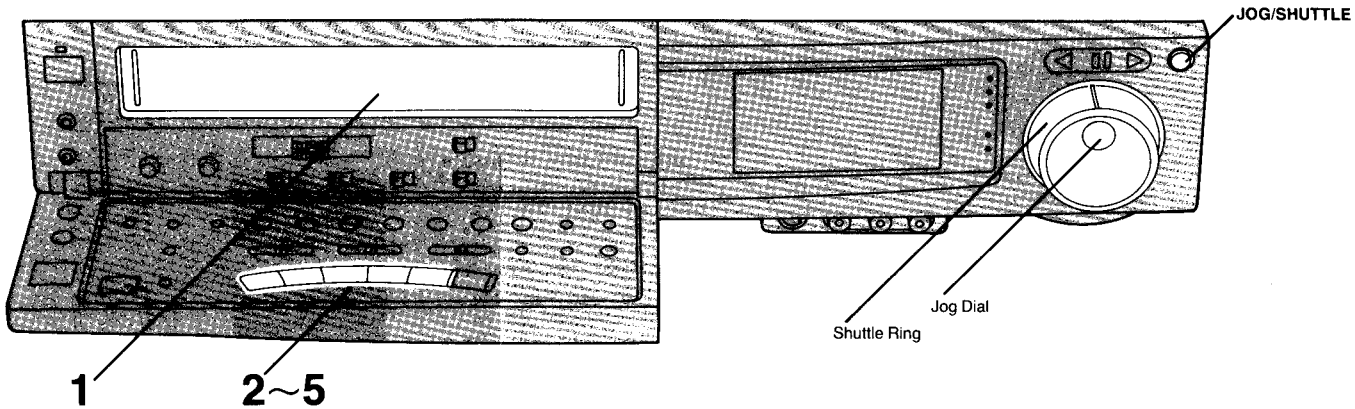

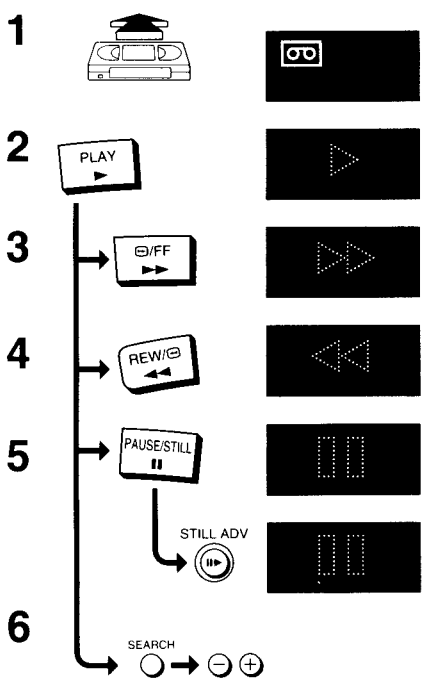

Introduction

The playback controls allow you to view at normal speed, to search for a specific scene with the tape moving faster than normal to freeze into a still picture, to advance this still picture frame by frame, and to view in slow-motion.

Operations

1 Insert a recorded cassette tape.
- If it has already been inserted, press VTR to turn the unit on.
  Turn on the TV and select 21 pin scart terminal input or station number which has been tuned to channel 36 for VTR playback.

2 Start viewing the picture by pressing **PLAY**.

3 To search for a specific scene while viewing the picture, press and hold down **FF** to search ahead.
For longer Cue playback, quickly press the button to start the Cue playback. To change back to normal playback, press **PLAY**.

4 To search for a specific scene while viewing the picture, press and hold down **REW** to search back.
For longer Review playback, quickly press the button to start the Review playback. To change back to normal playback, press **PLAY**.

5 To interrupt playback for a still picture, press **PAUSE/STILL**.
To continue the normal playback, press **PLAY** or this button again.
To advance one frame of the still picture, press **STILL ADV**.

6 To activate the Search Function, press **SEARCH**, and adjust the playback or the reverse playback speed as necessary by pressing + or −.
To change back to normal playback, press **PLAY**.

Jog/Shuttle

1 During any playback mode, press **JOG/SHUTTLE**, and the VTR drops into still mode.

2 Using the Shuttle Ring, select the desired playback speed in both forward and reverse directions.

3 Using the Jog Dial, locate the desired picture exactly.

Notes:
- If Cue or Review playback continues for more than 10 minutes, the VTR will automatically switch over to the normal playback mode. If the Still and Slow playback continues for more than 5 minutes, the VTR will automatically switch over to the stop mode.
- In Cue and Review playback, noise bars and distortions can occur on the screen. However, this is not a malfunction.
- The sound will be played back only during normal playback.
- Audio reproduction of linear (conventionally recorded) stereo tapes will be monaural when played back on the FM Hi-Fi video recorders.
- In "LP" mode only:
  1. During any playback mode other than normal playback, the picture may contain some noise bars or vibration, the colour may be unstable or colourless.
  2. When playing back a tape which was recorded on another VTR, it may be necessary to adjust the Tracking Control. In some cases the picture quality may still be inferior. This is due to limitation of format.
- PAL/MESECAM
  During Playback
  PAL: When playing back a tape recorded in the PAL system
  MESECAM: When playing back a tape recorded in the MESECAM system
- Even after the VTR has been set to the stop mode, its head cylinder will rotate for about 20 minutes so that the playback picture will appear promptly on the TV screen.

On-the-spot Recording

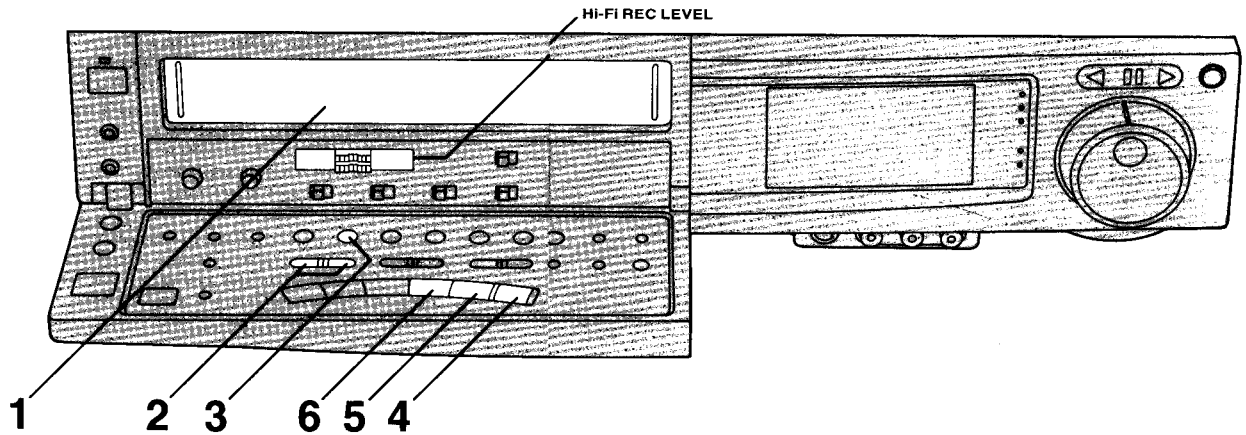

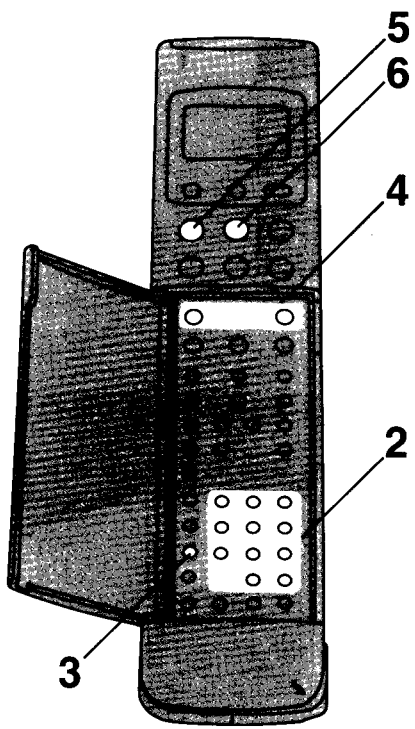

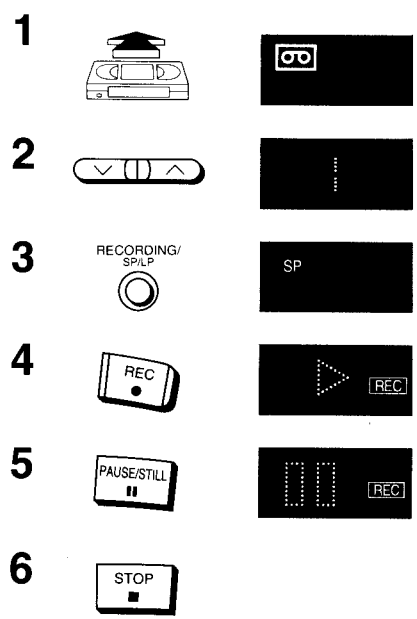

Introduction

You can record a TV programme without turning on the TV, and you can record one TV programme while viewing another.

Operations

1 Insert a cassette tape with an intact erasure prevention tab.
- If it has already been inserted, press **VTR** to turn the unit on.

2 Select the required TV station on the VTR by pressing ∨∧.

3 Select the tape speed SP or LP.

4 Start recording by pressing **REC**.
- When a video cassette with broken out tab is inserted, the "▭" indication will flash, and an alarm sound will be produced to indicate that recording is not possible.

5 To interrupt recording, press **PAUSE/STILL**, and press again to continue recording.
- If you leave the VTR in the pause mode for more than 5 minutes, the VTR will automatically switch over to the stop mode to protect the tape and the video heads.

6 To stop recording, press **STOP**.

Recording one TV programme while viewing another

1 Use the on-the-spot recording operations.
2 Select the TV programme on your TV set you wish to view at the present time on the TV set.

Adjustment of the Hi-Fi Audio Recording Level

Setting the **Hi-Fi REC LEVEL** to the centre "5" position (click stop) assures satisfactory audio recording results in most cases. When using the VTR as a Hi-Fi audio recorder or when producing your own video tapes, it may be desirable to adjust the **Hi-Fi REC LEVEL** to some other position.
(It is recommended to adjust so that peaks in the audio level reach about +4 dB.)
- The sound to be recorded on the "normal" audio track will be adjusted automatically.

Erasure Prevention Tab

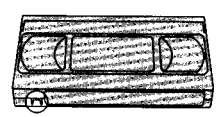

To prevent accidental erasure

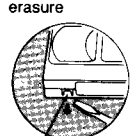

Break off the tab with a screwdriver.

To record again

Cover the hole with adhesive tape.

Automatic Features

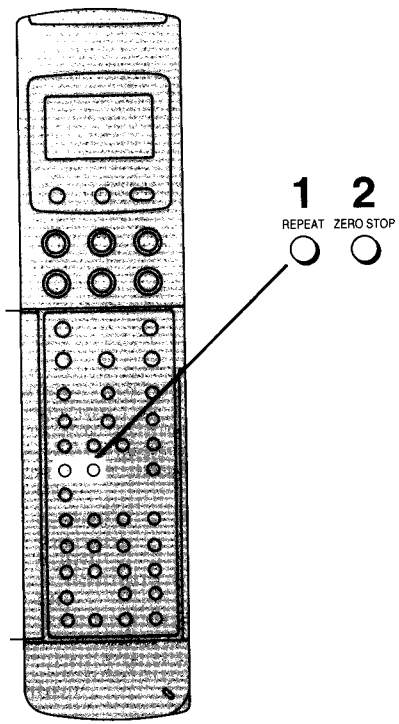

Introduction

The VTR incorporates a number of automatic features for easy operation.

1 **Repeat Playback**
To repeat playback from the beginning of tape to the end of the recorded segment, press **REPEAT**.

2 **ZERO STOP**
To fast forward or rewind to the counter 0:00.00. Press **ZERO STOP**.

Automatic switching on
When a cassette is inserted, the VTR turns itself on automatically.

Automatic playback
When a cassette without an erasure prevention tab is inserted, the VTR starts playback automatically.

Automatic rewinding
When the tape reaches its end during recording (except for OTR and timer recording) or playback, it will automatically be rewound to the beginning.

Automatic switching off and ejection
When the VTR is switched off, an inserted cassette can be ejected simply by pressing **EJECT**. The VTR will eject the cassette and automatically turn itself off again.

Automatic head cleaning
This VTR automatically removes tape particles and dust from the video heads to ensure continuously superior picture quality. While the head cleaner is working, some mechanical noise can be heard from the VTR, this not being a malfunction.

One-Touch Timer Recording (OTR)

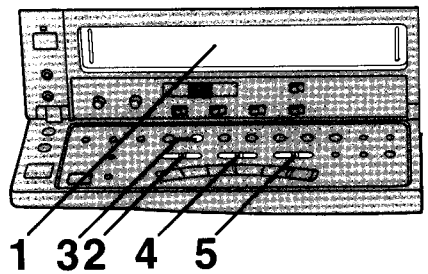

For example:
OTR recording of a TV Station 1 from 20:02 to 20:30.

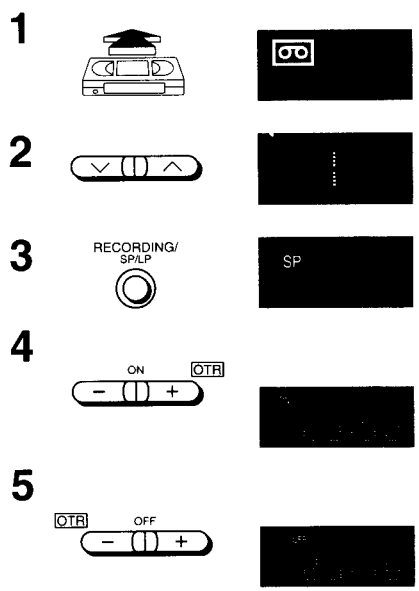

Introduction

OTR allows you to quickly set up the VTR to record a single programme starting within the next 24 hours.

Operations

1 Insert a cassette tape with an intact erasure prevention tab.
- If it has already been inserted, press VTR to turn the unit on.

2 Select the required TV station on the VTR by pressing ∨∧.

3 Select the tape speed SP or LP.

4 Set the starting time by pressing **ON**.
- When a video cassette with broken out tab is inserted, the "▬" indication will flash, and an alarm sound will be produced to indicate that recording is not possible.
- If you want the recording to start immediately, omit this step.

5 Set the ending time by pressing **OFF**.
After 4 seconds, the display will automatically change back to the starting time indication.
- The VTR will automatically switch off, when the OTR is completed. To turn the VTR on again, press **VTR**.

Notes:
- To cancel an OTR setting, press **VTR**.
- It is possible to change the OTR starting time or the ending time before the recording starts.
- It is possible to change the OTR ending time during recording.
- Make sure that the OTR Function (One-Touch Timer Recording) does not overlap a programmed timer recording. An OTR always takes precedence over a timer recording.

To confirm the OTR ending time before the recording starts
Press **PROG/CHECK** once.
When this button is pressed twice, the display will change to the clock indication mode.

To confirm the present time during recording
Press **PROG/CHECK**.

Timer Recording

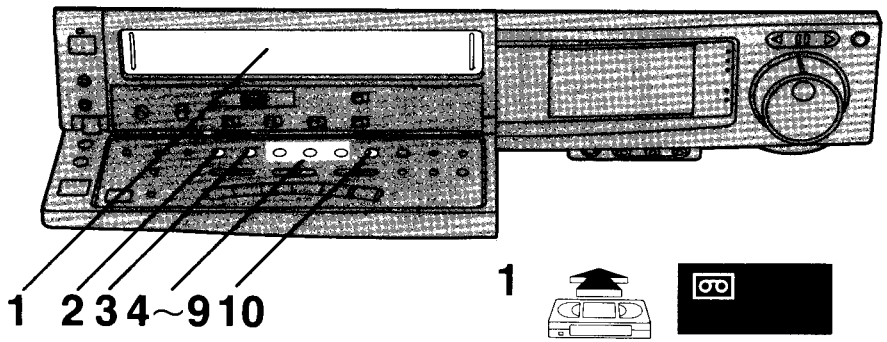

Introduction

Up to 8 programmes can be recorded over the following month by setting the timer.
This can also handle recording of daily and weekly programmes.
The daily recording can be set according to 3 patterns:
Monday to Friday
Monday to Saturday
Sunday to Saturday

For Example:
Programming a timer recording for a TV programme that will be broadcast on Wednesday, October 27, from 20:02 to 21:30, on programme position (channel) 1, on timer Programme number 1.
(Present date=October 10, 1999)

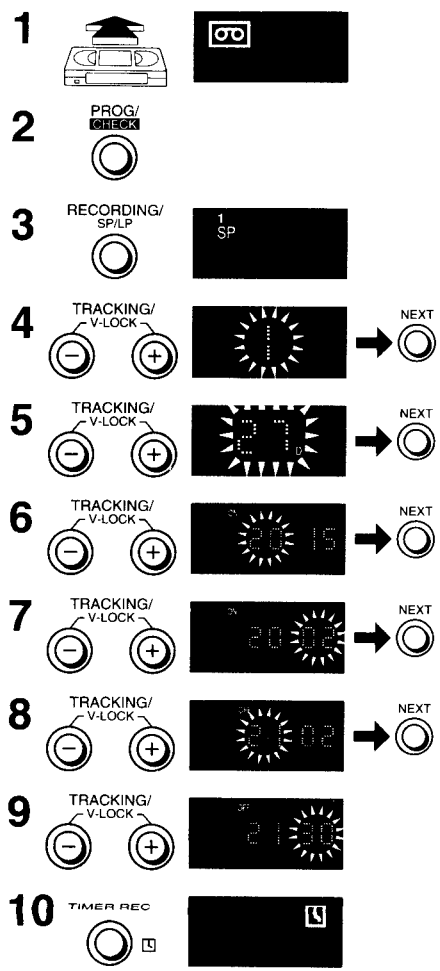

Operations

1 Insert a cassette tape with an intact erasure prevention tab.
- If it has already inserted, press VTR to turn the unit on.

2 Select the programme number by pressing **PROG/CHECK**.

3 Select the recording speed by pressing **RECORDING SP/LP**.

4 Select the TV station by pressing **TRACKING/V-LOCK** + or − and memorize by pressing **NEXT**.

5 Set the date by pressing **TRACKING/V-LOCK** + or − and memorize by pressing **NEXT**.
- For daily recording, select one of the three different daily patterns by pressing **TRACKING/V-LOCK** + or −.
- For weekly recording, select the day by pressing **TRACKING/V-LOCK** + or −.

6 Set the starting time hour by pressing **TRACKING/V-LOCK** + or − and memorize by pressing **NEXT**.

7 Set the starting time minute by pressing **TRACKING/V-LOCK** + or − and memorize by pressing **NEXT**.

8 Set the ending time hour by pressing **TRACKING/V-LOCK** + or − and memorize by pressing **NEXT**.

9 Set the ending time minute by pressing **TRACKING/V-LOCK** + or −.
- There is no need to press **NEXT**.
- Repeat steps 2 to 9 for the other programmes.

10 Activate timer recording by pressing **TIMER REC**.
- "⏲" is displayed and the VTR is set in the standby mode so that it cannot be operated manually.
- If you want to operate the VTR manually, press **TIMER REC**.
  To reactivate the timer press this button again.

Confirming the timer settings
Select the programme number to be checked by pressing **PROG/CHECK**.
The preset channel and start and ending times of the timer recording will be indicated for about 12 seconds.

Cancelling the timer settings
- Release from the standby mode by pressing **TIMER REC**.
- Select the programme number to be cancelled by pressing **PROG/CHECK**.
- Press **CANCEL**.

Turning VPS function On and Off
Press **AFC/VPS** in any of the operation steps 3 to 9.
- If the actual broadcasting times of timer recordings overlap (regardless of whether they are VPS-controlled), the recording that starts first has always priority, and the recording of the later beginning programme will start only after the first timer recording has finished.
- When the VPS signal drops out because the broadcast signal is weak, or when a broadcasting station does not transmit a regular VPS signal, the timer recording will be performed in the normal mode (without VPS) even if it was programmed for VPS.

Note:
If a timer recording is not performed to the end (not enough tape or cancelled by the user), the programmed timer recording data will be cancelled from the memory at 4 a.m. two days later.
However, if the Timer Record Function is activated or an OTR recording is being performed at that time, the programmed timer recording data will be cancelled at 4 a.m. the next day.

Using the Remote Controller

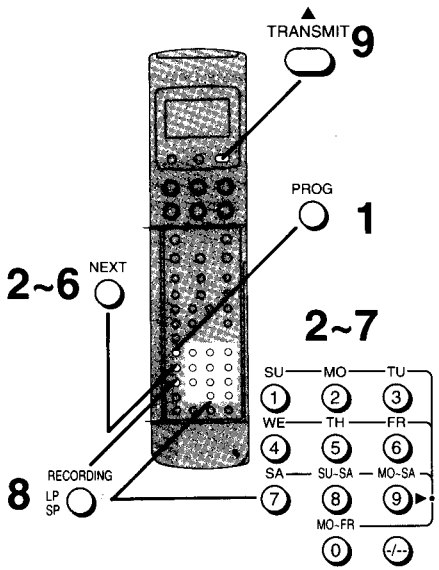

How to select the programme position (channel)
To select a figure between 1 and 9, press the numeric button corresponding to the number.
To select a 2-digit figure, first press the "–/– –" button and then press the two corresponding numeric buttons.

How to set the Date and the Starting & Ending Times for Timer Recording
To select a figure between 0 and 9, first press the numeric button "0" and then press the numeric button corresponding to the number.
To select a 2-digit figure, press the two corresponding numeric buttons one after the other.

2 — 0 — 2
15 — 1 — 5
30 — 3 — 0

- The second button must be pressed within 5 seconds after the first button.

For Example:
When programming a timer recording for a programme that will be broadcast on channel position 45 on the 3rd of the month, from 20:02 to 21:30.

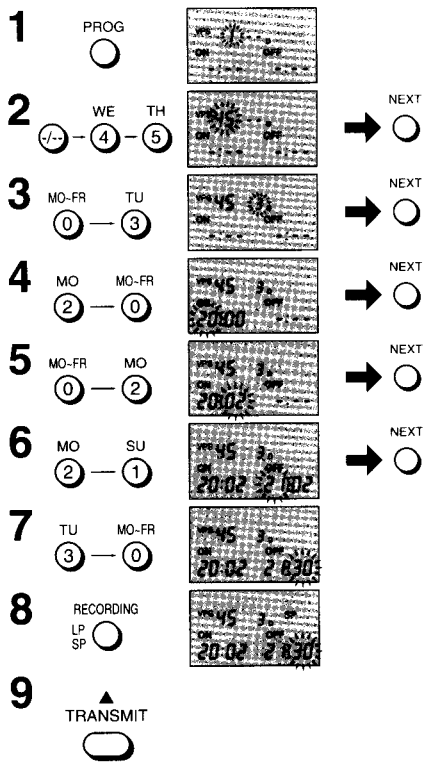

Note:
If no operation is performed on the Remote Controller for more than 25 seconds, it will automatically switch over to the power-saving standby condition and the indications on the Display will disappear. In this case, the data which have not yet been transmitted to the VTR will be cancelled.

Operations

1 Start programming by pressing **PROG**.
The input field for the programme position on the display of the remote control unit flashes.

2 Enter the programme position and then press **NEXT**.

3 Enter the date and then press **NEXT**.

Timer Recording Every Day at the Same Time
For this timer function, several groups of days can be selected.

Ⓐ Daily recording from Sunday to Saturday
Ⓑ Daily recording from Monday to Saturday
Ⓒ Daily recording from Monday to Friday

Ⓐ MO-SA 9 — SU-SA 8
Ⓑ MO-SA 9 — MO-SA 9
Ⓒ MO-SA 9 — MO-FR 0

Timer Recording on the Same Day Every Week at the Same Time
For Example, SU (Sunday).

MO-SA 9 — SU 1

4 Enter the starting time (hour) and then press **NEXT**.

5 Enter the starting time (minute) and then press **NEXT**.

6 Enter the ending time (hour) and then press **NEXT**.

7 Enter the ending time (minutes).

8 Select the desired tape speed ("SP" or "LP") by pressing **RECORDING SP/LP.**

9 Point the Infra-red Transmitter at the VTR Receiver Window and press **TRANSMIT**.
The transmitted data appear on the display and a repeated beep confirms the reception.

Turning VPS function On and Off
Press VPS in any of the operation steps 2 to 9.

VPS

Turning Timer On and Off
After programming a timer recording, the Timer Recording Indicator "◷" lights up and the VTR can no longer be used for recording and playback. To make it possible to use the VTR, turn off **TIMER REC** ("◷" goes out). To reactivate the timer, press this button again.

TIMER REC

Timer Recording from External Picture/Sound Source
If Timer Recording is performed by a unit connected to the 21 pin scart terminals or Audio Video in sockets, press **INPUT SELECT** to select the A1, A2 or A3 indicator for the programme position.
A1: Through the 21 pin AV1 socket.
A2: Through the 21 pin AV2 socket.
A3: Through the Audio Video IN3 sockets. (AV3)

INPUT SELECT

Checking of Timer Programming
- The VTR must be turned on.
- Make sure that the display of the Remote Controller is not on. If it is, turn it off with **SCANNER ON/OFF**.

Press **TRANSMIT**.
- If necessary, press **TRANSMIT** several times until the desired timer position is displayed.
- The programmed data will be displayed for about 12 seconds on the display of the VTR. To check the data on the next timer position, press **TRANSMIT** again.

TRANSMIT

Cancelling a Timer Programming
To cancel a programmed timer recording, this data must be displayed on the display of the VTR.

❶ Press **TRANSMIT**.
- If necessary, press **TRANSMIT** several times until the desired timer position is displayed.

TRANSMIT

❷ Press **CANCEL**.
- The programmed timer recording will be cancelled and dashes "– –" will appear on the display.

CANCEL

Search Function

VHS Index Search System

For example:
Searching for the 2nd recorded segment.

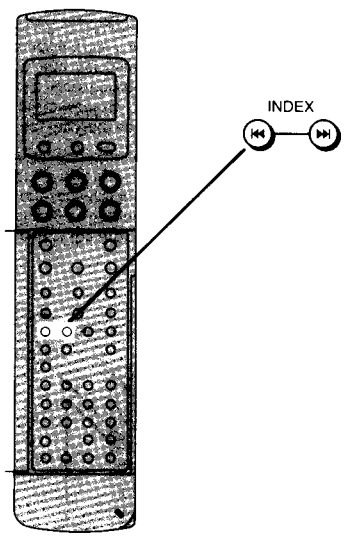

Introduction

It is very easy to find the beginning of each recording, because a special index signal is recorded at the start of each recorded segment on the tape.
Up to 20 index signals can be searched for in both directions.

Preparation

Set the VTR in the normal playback or stop mode.

Operation

Start to index search and select the 2nd recorded segment by pressing **INDEX ▶▶I** twice.

- For reverse direction, press **INDEX I◀◀**.
- After finding the specific recorded segment, playback starts.

Recording of Index Signals
While recording an index signal, the indication "WRITE" lights up for a few seconds. Index signals will be recorded automatically at the start of recording. It is also possible to record an index signal by pressing **REC** during recording to mark your own reference point.

Notes:
- The Search function can only count the addresses correctly, if the index signals are spaced at least 3 minutes in the SP mode and 5 minutes in the LP mode.
- If there are unrecorded parts on the tape, or if recordings have repeatedly been made on the same tape portion, the Search function may not work correctly.

Time Search

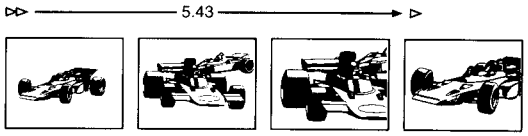

For example:
Searching for the recording 5 min. and 43 sec. after the start of playback.

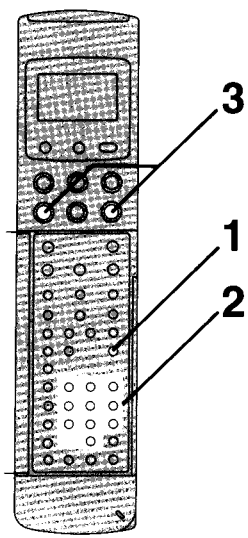

Introduction

It is easy to search forwards or backwards along the tape by a specific amount of playback time to locate a scene or skip programme items of secondary interest.

Preparation

Insert a recorded cassette tape and set the VTR in the stop mode.

Operations

1 Set to time search by pressing **TIME SEARCH**.

2 Enter the 5 min. and 43 sec. by pressing Ten Key.

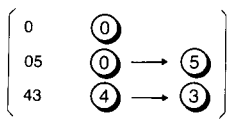

3 Start searching by pressing **FF** or **REW**.
The playback starts after rewinding or fast forwarding to the tape position of the designated time.

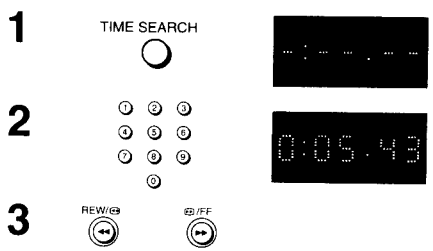

Editing

Connect a Movie Camera or another VTR to this VTR as shown.

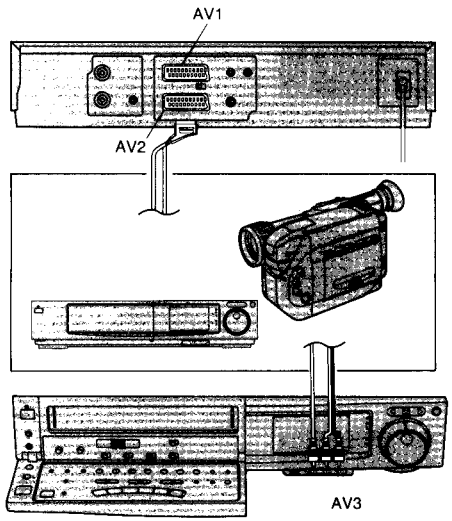

The description here applies when the unit has been connected to AV1. When AV2 or 3 is used, press the INPUT SELECT button to select the respective connection. All other operations are the same as when the connection is made to AV1.

Synchronized Editing between the VTRs
When editing from another VTR equipped with Synchro Edit Socket, synchronized start and stop of both VTRs can be activated from this VTR.

Note:
- Set **NOISE FILTER/EDIT** to OFF for ordinary use of the VTR.
- To copy the NTSC tape, see page 1-18.
- PAL/MESECAM
  During AV Signal Input
  PAL: When receiving PAL signals
  MESECAM: When receiving SECAM signals

Copy Editing

This function is used to make duplicate.

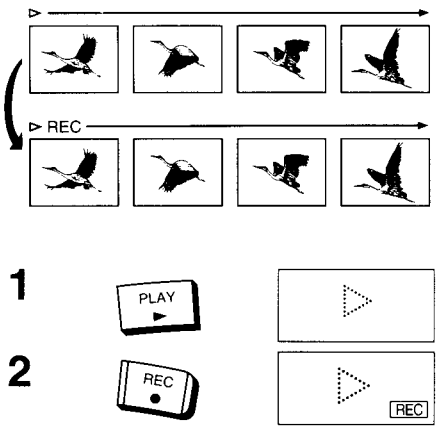

Preparation

Insert the recorded tape in the already connected video source, and a blank tape into this VTR and select AV1 by pressing **INPUT SELECT**.
Set **NOISE FILTER/EDIT** to EDIT.

Operations

1 Play back the recorded tape on the Video source.

2 Copy the tape by pressing **REC** on this VTR.

Assembly Editing

It can be used to make up an Edited tape from several other recordings or video sources.

A new scene can be added to the end of a previous one, providing a clean edit without noise.

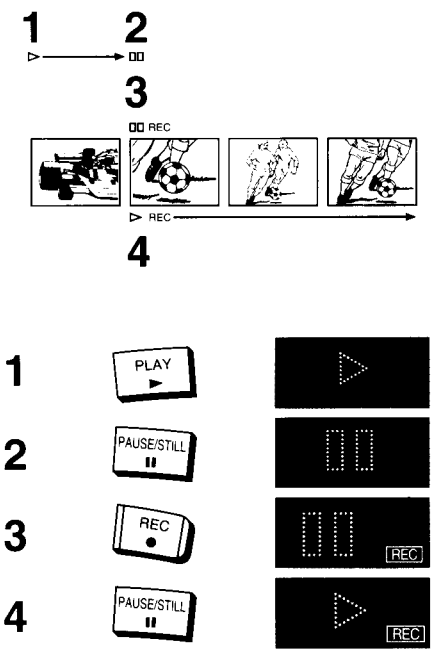

Preparation

Insert a recorded cassette tape with an intact erasure prevention tab, and select the video source required by pressing **INPUT SELECT** to set AV1.
Set **NOISE FILTER/EDIT** to EDIT.

Operations

1 Search for the end of the previously recorded segment by pressing **PLAY**.

2 At the end point, press **PAUSE/STILL**.

3 Set for the new recording by pressing **REC**.

4 Start the new recording by pressing **PAUSE/STILL** again.

Insert Editing

It is used to substitute one scene for another providing a noise free Edit to the picture at both the Edit IN and OUT points.

Insert Editing cannot be used on blank sections of tape. In this case use Assemble Editing first.

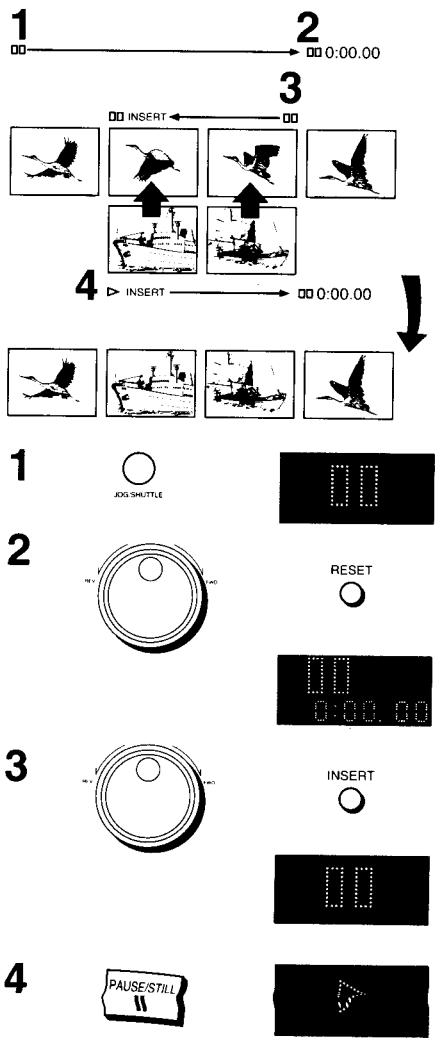

Preparation

Insert a recorded cassette with an intact erasure prevention tab, and select the video source required by pressing **INPUT SELECT** to set AV1.
Set **NOISE FILTER/EDIT** to EDIT.

Operations

1 Press **JOG/SHUTTLE**.

2 Use the Shuttle Ring and the Jog Dial to search for the point where you want the editing to end (end point), and set the counter to 0:00.00 by pressing **RESET**.

3 Use the Shuttle Ring and the Jog Dial to search for the point where you want the editing to start (start point), and press **INSERT**.
(The Insert Editing Indicator lights up.)
If you want to replace the sound on the "normal" audio track, too, press **AUDIO DUB**.
(The Audio Dubbing indicator lights up.)

4 Start insert editing by pressing **PAUSE/STILL**, and the inserted new recording will stop in the still playback mode when the counter reaches 0:00.00.

Audio Dubbing

It is used to add the back ground music etc.

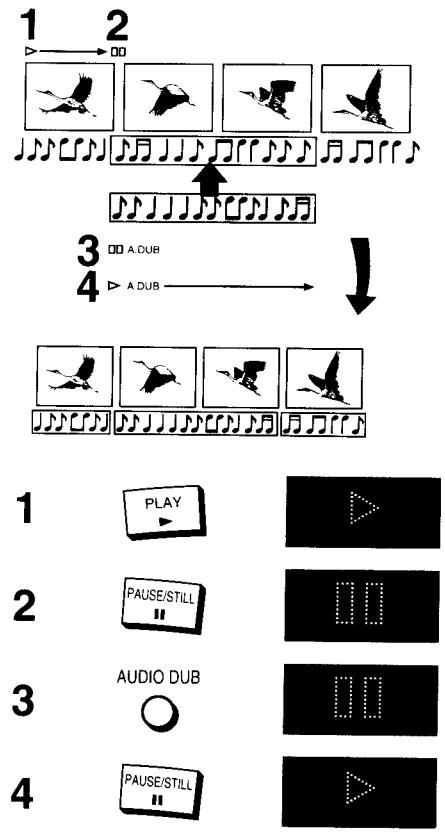

Preparation

Insert a recorded cassette with an intact erasure prevention tab, and select the audio source required by pressing **INPUT SELECT** to set AV1.

Operations

1 Search for the starting point at which you want to record new sound by pressing **PLAY**.

2 At the beginning of the point press **PAUSE/STILL**.

3 Set for audio dubbing by pressing **AUDIO DUB**.
(The Audio Dubbing indicator lights up.)

4 Start recording the new sound by pressing **PAUSE/STILL**.
Stop recording by pressing **STOP**.

Note:
The new sound will be recorded on the normal sound track of the tape, and the original sound will remain on the HiFi sound track. Only monaural sound recording is possible on the normal sound track.
To hear the new sound, select the normal sound track by pressing **AUDIO OUT**.
To hear the new sound and original sound mixed together, set **HI-FI/NORMAL MIX** to ON.

Bar Code Operation

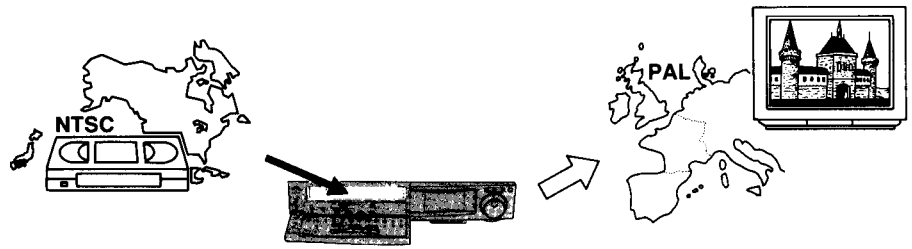

NTSC Playback

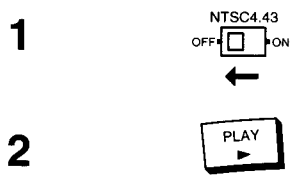

Operations

1 Set **NTSC 4.43** to OFF.

2 Insert the **NTSC** cassette tape and play back by pressing **PLAY**.

Note:
- NTSC is the TV broadcasting system used in U.S.A., Japan, and some other countries.
  PAL is another TV broadcasting system used in Germany and many other parts of the world.
  This VTR will not replay or Record tapes on the SECAM broadcasting system.
  This system is a modified version of the PAL broadcasting system to allow most Europian TV's to reproduce a colour picture when an NTSC tape is replayed on this VTR.
  However due to the system change, the picture may shrink, roll or not reproduce colour on some Televisions.
- During playback of NTSC recordings, the Tape Counter does not function correctly.

NTSC Editing

Connect this to another VTR which has **NTSC 4.43** Switch.

Ensure **NOISE FILTER/EDIT** is set to **EDIT**.

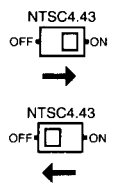

Operations

1 Set **NTSC 4.43** to ON for both VTRs.
Then, start recording same as page 1-16, 1-17.

2 Set back the **NTSC 4.43** to OFF.

Scanner Preparation

Operating the Remote Controller

This remote controller also operates as a digital-scanning bar code reader.

Press **SCANNER ON/OFF** to turn it on.

If the remote controller is not operated within 25 seconds (within 4 minutes when setting the clock time), it will automatically switch over to the power-saving standby condition and the lamp will go off. (In this condition, if bar codes have already been read but not yet transmitted to the VTR, the data will be cancelled.)

When the lamp is not lit, press **SCANNER ON/OFF** to turn it on again.

Reading the bar codes

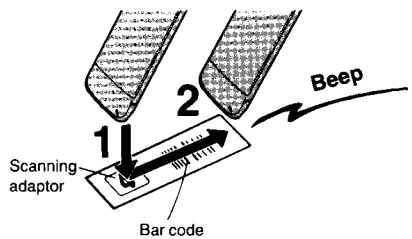

1 Fit the remote controller to the scanning adaptor.

2 Trace the bar code quickly in the direction of the arrow, ensuring that you trace it completely past the last bar. The "Beep" sound indicates that the bar code has been read completely.

When the Bar Codes Cannot be Read

Although the lamp in the tip of the Bar Code Reading Section lights up:
- No figures appear in the Display
- No beep sounds is heard;

The tip of the Bar Code Reading Section is probably clogged with dirt.

Cleaning

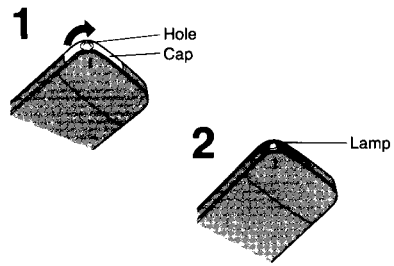

1 Remove the cap of the Bar Code Reading Section.
- Remove dirt and dust from the hole of the cap.

2 Gently wipe the tip of the lamp with a soft cloth.
- Reattach the cap by inserting it until it locks with a click.

Remote Control Modes

Adjust the remote control mode of the Digital Scanner to the same remote control mode (VTR 1 or VTR 2) as selected on the VTR itself.

When Remote Control Mode "VTR 2" is selected on the VTR

Trace the "VTR 2" bar code on the Programming Sheet.
- "VTR 2" will appear in the Bar Code Reader Display.
  When the "VTR 1" bar code is traced, the "VTR 2" indication will disappear and the remote control mode is changed back to "VTR 1".

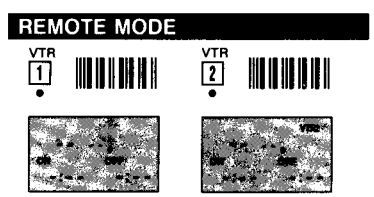

Note: There is no indication on the display for "VTR 1".

Storing TV Broadcasts

Read in the required data successively by tracing the bar codes.

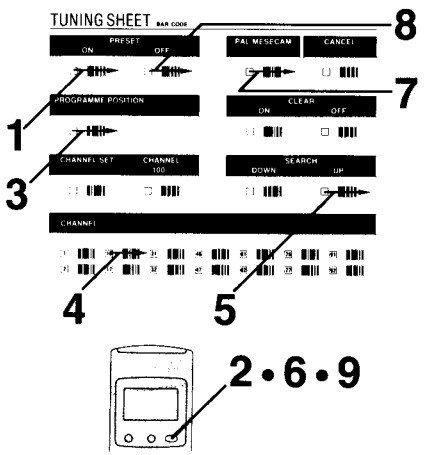

Operations

1 Trace the bar code "PRESET ON".
- If no operations are performed within more than 4 minutes, the Digital Scanner will automatically turn itself off.

2 Press **TRANSMIT** to transmit to the VTR.

3 Trace the bar code "PROGRAMME POSITION".

4 Trace the bar code for the programme position (channel) that you want to tune to a station.

5 Trace the bar code "SEARCH UP" or "SEARCH DOWN".

6 Press **TRANSMIT** to transmit to the VTR.
- The channel will be tuned automatically.
- At every push of the button, the next channel will be tuned.

7 When the Indication in the Multi-Function Display does not show the correct broadcasting system ("1"=PAL; "2"=MESECAM) for the station to be tuned, trace and transmit the bar code PAL/MESECAM to select the correct broadcasting system.

8 Trace the bar code "PRESET OFF".

9 Press **TRANSMIT**.

Notes:
- If you make a mistake in the above operation steps, trace the bar code "CANCEL" and start again from step 4.
- When setting more than 2 channels, repeat the steps 3–7 above.

Setting the Tuner Directly
Perform the operation steps 1–4.

5 Trace the bar code "CHANNEL SET".

6 Trace the number of the channel for the TV station that you want to tune.
- When tuning a TV station in the hyperband, trace the bar code "CHANNEL 100~" and then trace the bar code "CHANNEL".

Press **TRANSMIT** to transmit to the VTR.

Perform the operation steps 7–9.

If you want to tune further TV stations, repeat the steps 3 to 7.

Blanking of Unoccupied Programme Positions
Perform the operation steps 1–3.

4 Trace the bar code for the programme position that you want to blank so that it will be skipped during Up/Down selection of the programme positions.

5 Trace the bar code "CLEAR ON".

6 Press **TRANSMIT** to transmit to the VTR.

7 Trace the bar code "PRESET OFF".

8 Press **TRANSMIT**.

Cancelling the Clear Function (Blanking)
Perform the operation steps 1–3 above.

4 Trace the bar code for the programme position that has been blanked until now.

5 Trace the bar code "CLEAR OFF".

Perform the operation steps 6–8 above.

- To programme a timer recording or the set the clock time immediately after setting the tuner in the VTR by using the Remote Controller, first press **SCANNER ON/OFF** on the Remote Controller to turn it off, before starting the above operation.

Setting the Clock

Read in the following data successively by tracing bar codes 1 to 6 on the programming sheet.

For Example: Set the clock for Sunday, October 10, 1999, 20:15.

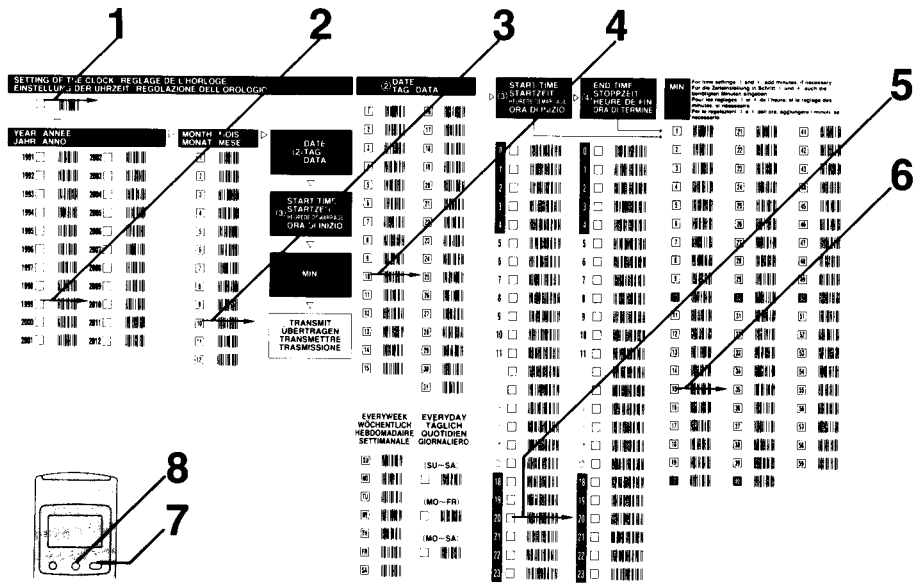

Preparation

Turn on the VTR and the remote controller.

Operations

1 Trace the bar code SETTING OF THE CLOCK.

2 Trace the bar code for the year (YEAR).

3 Trace the bar code for the month (MONTH).

4 Trace the bar code for the day of the month (DATE).

5 Trace the bar code for the hour (START TIME).
- The repeated beep sound indicates correct bar code reading and readiness for transmitting the data to the VTR.

6 Trace the bar code for the minute (MIN).
- The beep sound will be heard again.

7 To transmit the data to the VTR, point the remote controller at the reception window on the VTR and press **TRANSMIT**.
- The transmitted data appears on the display, and a beep sound confirms proper reception.

8 To turn off the remote controller, press **ON/OFF** again.
- If the Remote Controller is left with no operation performed for more than 4 minutes, it will automatically switch over to the power-saving standby condition and the lamp in the reading tip goes out. In this case, bar codes that have already been read (but not yet transmitted to the VTR) will be cancelled.

Timer Recording

Setting Timer Recordings from Bar Codes
Successively scan the data for the programme channel, day, starting time and ending time by tracing bar codes 1 to 7 on the programming chart.

For Example:
When programming a timer recording for a programme that will be broadcast on programme position (channel) 4 on the 3rd of the month, from 20:02 to 21:30.

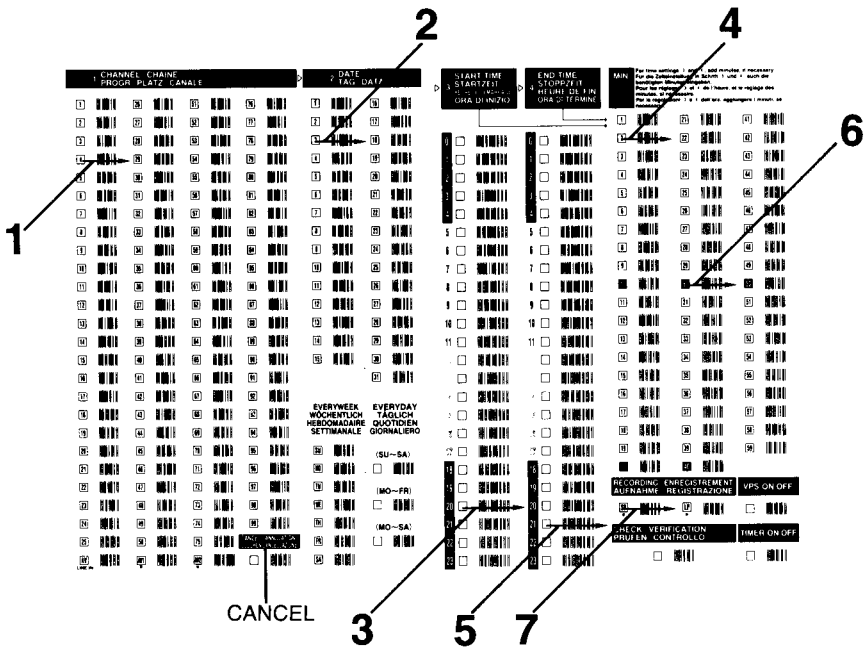

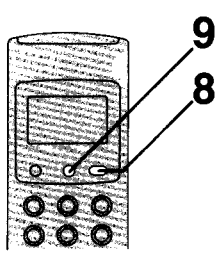

Preparation

Turn on the VTR and the remote controller.

Operations

1 Trace the bar code for CHANNEL.

2 Trace the bar code for DATE.

Timer Recording Every Day at the Same Time
For this timer setting, three day patterns can be selected:

Ⓐ Daily recording from Sunday to Saturday

Ⓑ Daily recording from Monday to Friday

Ⓒ Daily recording from Monday to Saturday

Timer Recording at the Same Time on the Same Day Every Week
Trace the bar code for the day of the week in the EVERYWEEK column.
For example, SU (Sunday).

EVERYWEEK
WÖCHENTLICH
HEBDOMADAIRE
SETTIMANALE

3 Trace the bar code for START TIME.

4 Trace the bar code for MIN.

5 Trace the bar code for END TIME.
- The repeated beep sound indicates readiness for data transmission to the VTR.

6 Trace the bar code for MIN.
- The beep sound will be heard again.

7 Trace the bar code for RECORDING according to the desired tape speed.
- The beep sound will be heard again.

8 To transmit the data to the VTR, point at the reception window on the VTR and press **TRANSMIT**.
- The transmitted data appears on the display of the VTR and a beep sound confirms proper reception.

Programming a Series Timer Recordings
Trace the CANCEL bar code.
Repeat the required steps 1 to 8 for each timer recording.

9 To turn off the remote controller press **SCANNER ON/OFF**.

Turning the Timer on and off
After programming a timer recording, the timer recording indicator "⏲" lights up, and the VTR can no longer be used for normal recording and playback. To make it possible to use the VTR, trace the TIMER ON/OFF bar code and transmit to the VTR (the timer recording indicator "⏲" will go out). To reactivate the timer again, trace the TIMER ON/OFF bar code again and transmit to the VTR (the "⏲" indicator will light again).

TIMER ON/OFF

Timer Recording from an External Signal Source
If a timer recording is to be made from a signal source that is connected to the 21 pin scart terminal, the "AV" bar code in the CHANNEL column must be traced for the programme.
AV 1: AV1 socket
AV 2: AV2 socket
- AV 3 can not be selected.

Checking Timer Recording Settings
The VTR must be turned on, or with the timer recording indicator "⏲" lit.

1 Trace the CHECK bar code.

2 Transmit the data to the VTR.
- The programmed data will be displayed for about 12 seconds in the display panel.
  To check the settings for the next timer recording, press **TRANSMIT**.

CHECK / VERIFICATION
PRÜFEN / CONTROLLO

Cancelling Timer Recording Data
The data for the timer recording must first be displayed on the panel.

1 Trace the CHECK bar code.

2 Transmit the data to the VTR.

3 Trace the CANCEL bar code.

4 Transmit the data to the VTR.

The programmed timer recording will be cancelled and "– –" dashes will appear on the display panel.

CANCEL / ANNULATION
LÖSCHEN / CANCELLAZIONE

Turning the VPS Function on and off
If the VTR is equipped with the VPS function, the VPS function is automatically activated when the Digital Scanner On/Off Switch is set to ON, or when the CANCEL bar code is traced. To cancel the VPS function, trace the bar code VPS ON/OFF. To activate the VPS function again, trace the bar code VPS ON/OFF again.

VPS ON/OFF

SECTION 2
ADJUSTMENT PROCEDURES

2-1. DISASSEMBLY METHOD

2-1-1. DISASSEMBLY FLOW CHART

This flow chart indicates disassembly steps of the cabinet parts and the circuit boards in order to find the necessary items for servicing.
When reassembling, perform the steps in the reverse order.

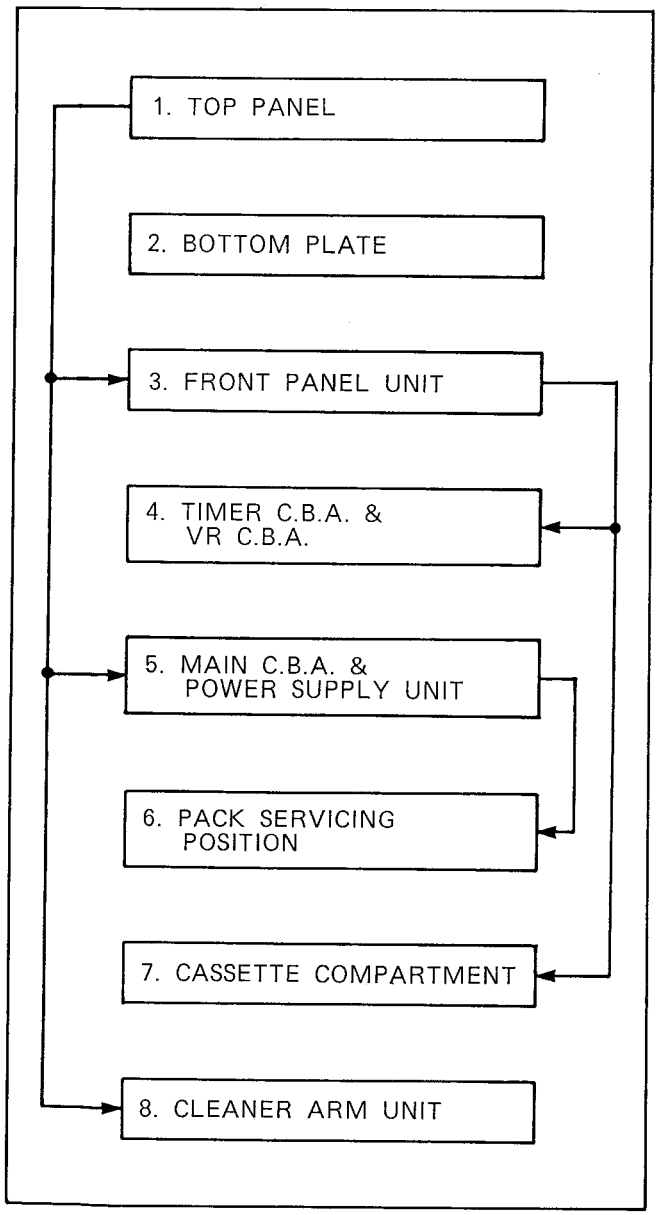

Fig. D1

2-1-2. DETAIL DISASSEMBLY METHOD

1. REMOVAL OF THE TOP PANEL

Remove...4 Screws(A)

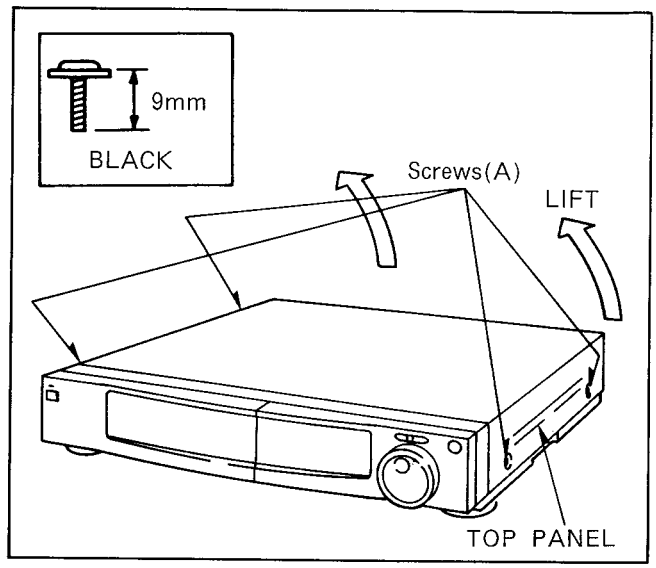

Fig. D2

2. REMOVAL OF THE BOTTOM PLATE

Remove...6 Screws(B)

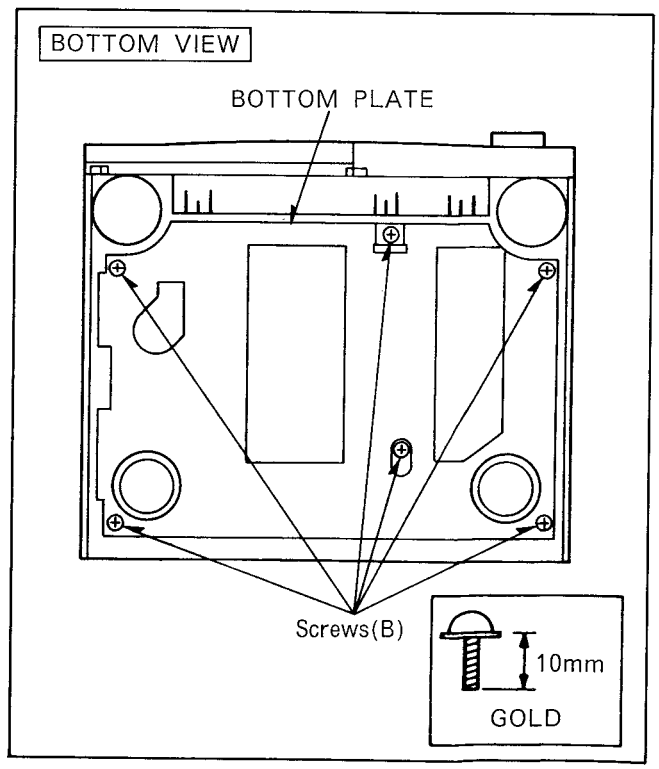

Fig. D3

3. 8. REMOVAL OF THE CLEANER ARM UNIT

1. Hook the Spring Arm(R) to lower side of Hook(S).
2. Unlock the locking portion(T) and then remove the Cleaner Arm Unit.

NOTE:
(1) Perform the steps in the reverse order when reassembling.
(2) When replacing Upper Cylinder, replace the Cleaner Arm Unit at the same time.

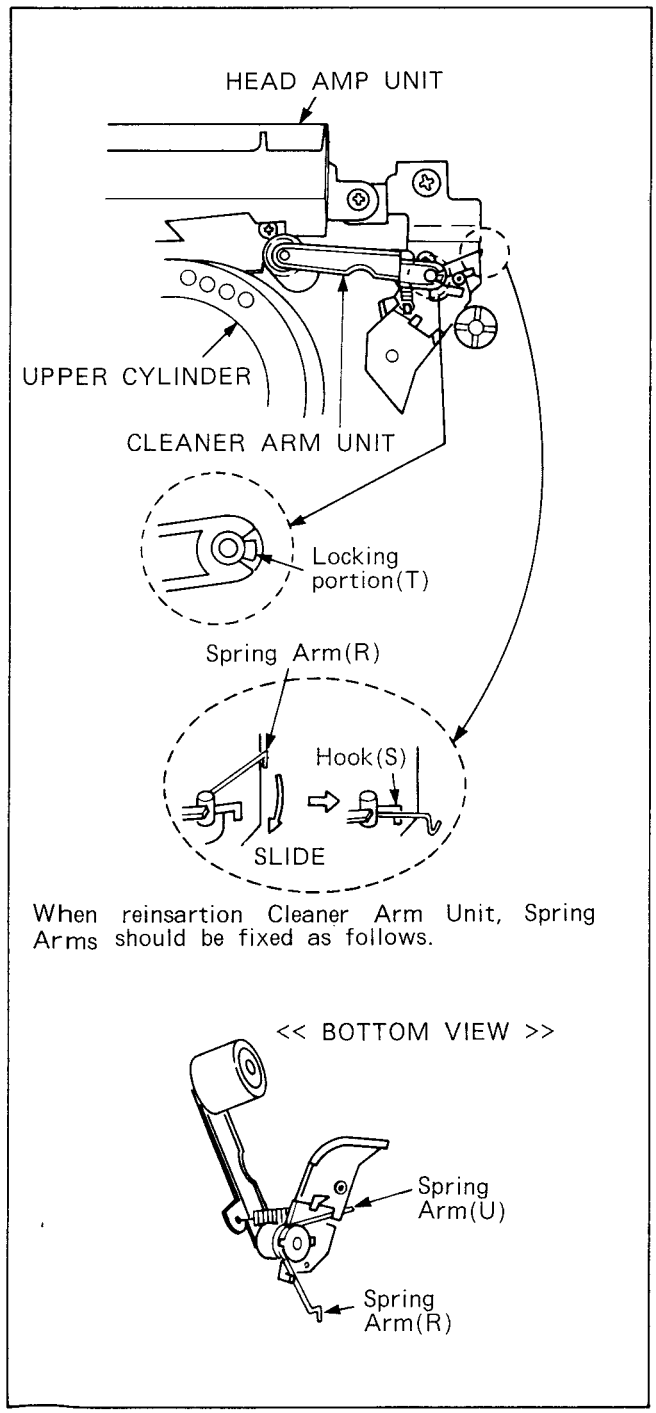

Fig. D11

2-2. MECHANICAL ADJUSTMENT PROCEDURES

This mechanical chassis is the same as G1(G–Rev.) Mechanical Chassis.
Therefore please refer to the Service Manual G1(G–Rev.) Mechanical Chassis(Order No. VRD8901M101).

2–2–1. TAPE INTERCHANGEABILTY ADJUSTMENT

CAUTIONS:
To make a Adjustment Mode for Tape Interchangeabilty, connect a Cut Jumper Wire as shown in Fig. M1.
(Auto Tracking is fixed to centre position.)

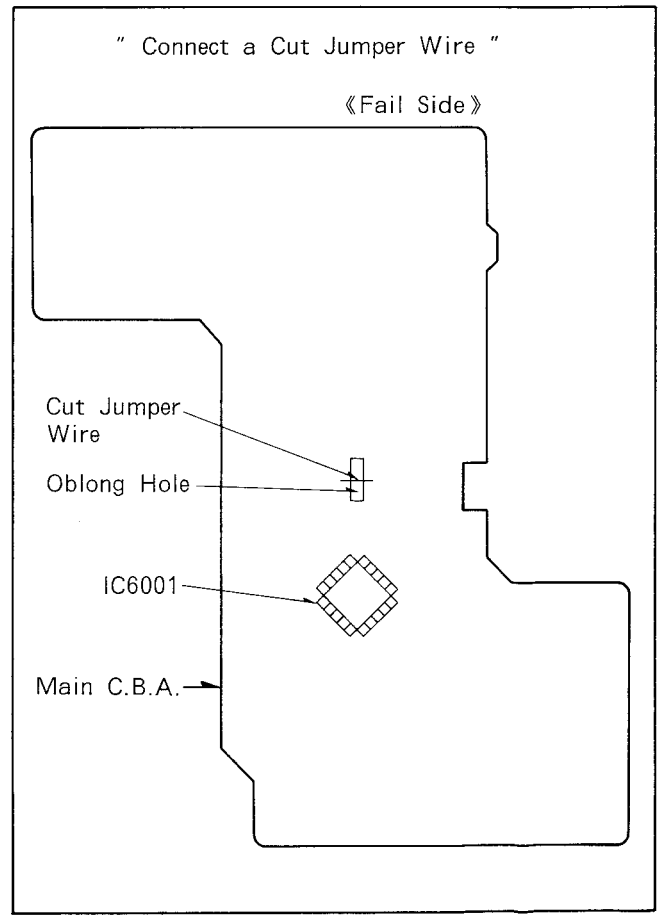

Fig. M1 Adjustment Mode

2-3. ELECTRICAL ADJUSTMENT PROCEDURES

This section provides complete electrical adjustment procedures which may be required for electric circuits of VHS Video Cassette Recorder.

2-3-1. TEST EQUIPMENTS

To perform the electrical adjustments completely, following equipments are required.

1. Dual-Trace Oscilloscope. (More than 35 MHz)
   - Voltage Range : 0.005-5V/div
   - Frequency Range : DC-35MHz
   - Probes : 10:1
2. Frequency Counter.
   - Frequency Range : 0-10MHz
   - Probes : 1:1
3. Vacuum Tube Volt Meter. (V.T.V.M.)
4. Video Sweep Generator.
5. Sine Wave Generator.
6. Video Pattern Generator.
7. VHS Alignment Tape. (VFJ8125H3F)
8. VHS Blank Tape.
9. Monitor.
10. Plastic Tip Driver.

2-3-2. PREPARATION

During adjustments, set each selector as follows when no indication on each procedures.

PICTURE VR.....Centre Fix
Hi-Fi REC LEVEL VR.....Center Fix
TAPE SELECT SW.....E195 Side
NOISE FILTER EDIT SW...OFF
Hi-Fi/NORMAL MIX SW....OFF
NTSC 4.43 SW.....OFF
TEST SIGNAL SW(REAR)...OFF
CHANNEL.....A1/A2/A3
(Set to signal input terminal number)
AUDIO OUTPUT SELECT....HiFi MODE

2-3-3. HOW TO READ ADJUSTMENT PROCEDURES

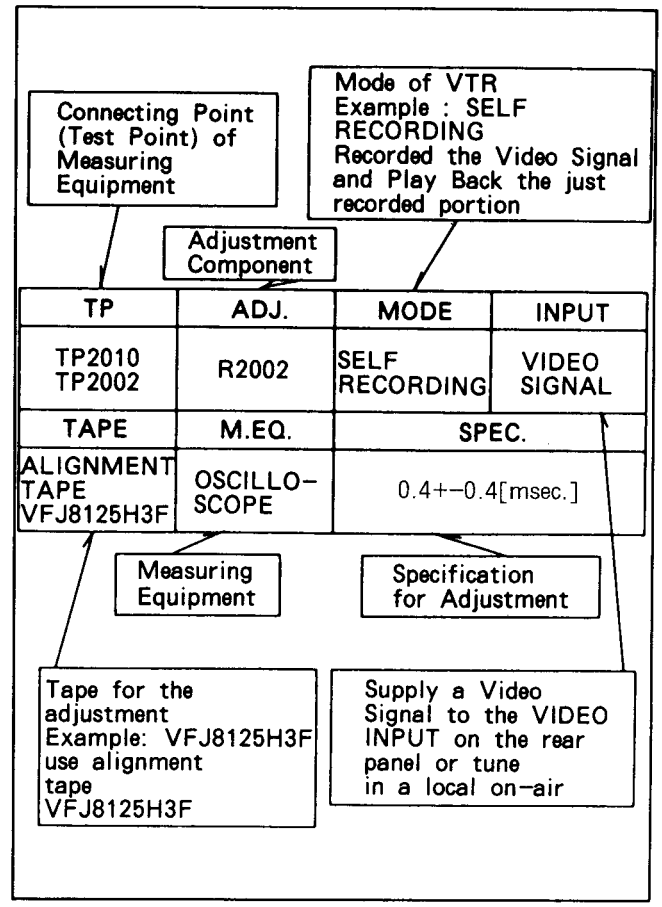

Fig. E1

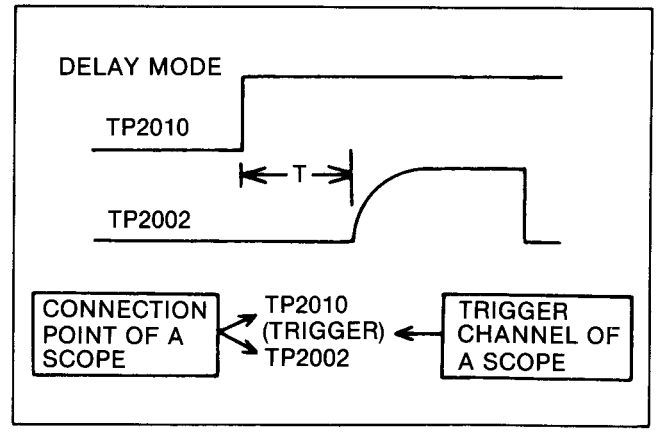

Fig. E2

2-3-4. ADJUSTMENT

SERVO SECTION

1. PG SHIFTER ADJUSTMENT

TP	ADJ.	MODE	INPUT
TL2001 PP3902-2	VR2001	PLAY BACK	
TAPE	**M. EQ.**	**SPEC.**	
ALIGNMENT TAPE VFJ8125H3F	OSCILLO-SCOPE	7.0±0.5 (H)	

1. Connect the oscilloscope to TL2001(H.SW) and PP3902-2(V.OUT).
2. Playback the alignment tape.
3. Adjust VR2001 so that the phase difference between falling edge of Head SW Pulse and V-Sync becomes 7.0+-0.5(H).

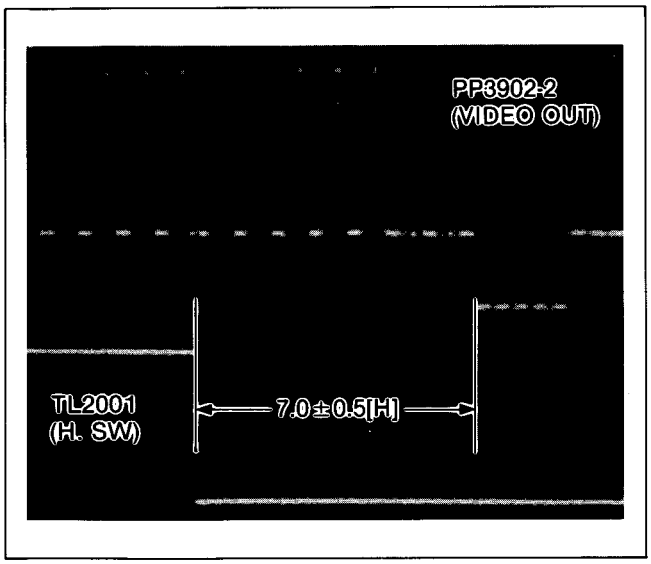

Fig. E3

2. SLOW TRACKING ADJUSTMENT (SP and LP mode)

TP	ADJ.	MODE	INPUT
MONITOR SCREEN	VR2011 (SP) VR2006 (LP)	SLOW	COLOUR BAR
TAPE	**M. EQ.**	**SPEC.**	
SELF RECORDED TAPE (SP/LP)	MONITOR TV	A=B (A+B)/V<1/6	

1. Connect a cut jumper wire as shown in Fig.E4.
2. Record the colour bar signal in SP(LP) mode for few time and playback the just recorded portion.
3. Place the unit in the slow mode by Shuttle Ring and then press the Tracking "+" and "−" buttons at the same time.

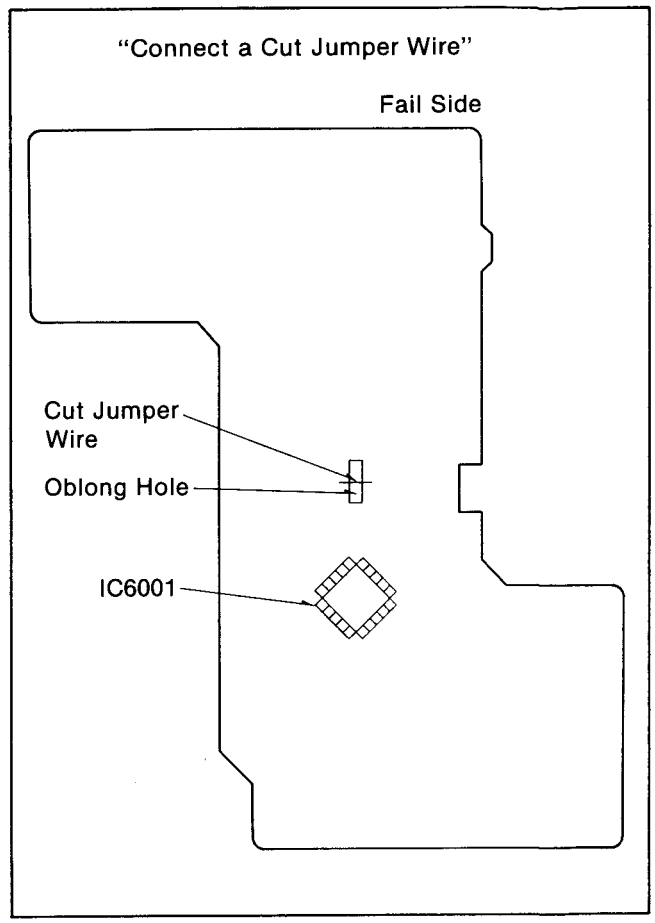

Fig.E4

4. Adjust VR2011(SP) (VR2006(LP)) so that the noise bar on the monitor screen becomes minimum. (Detail specifications are shown in Fig. E5)
5. Disconnect a jumper wire.

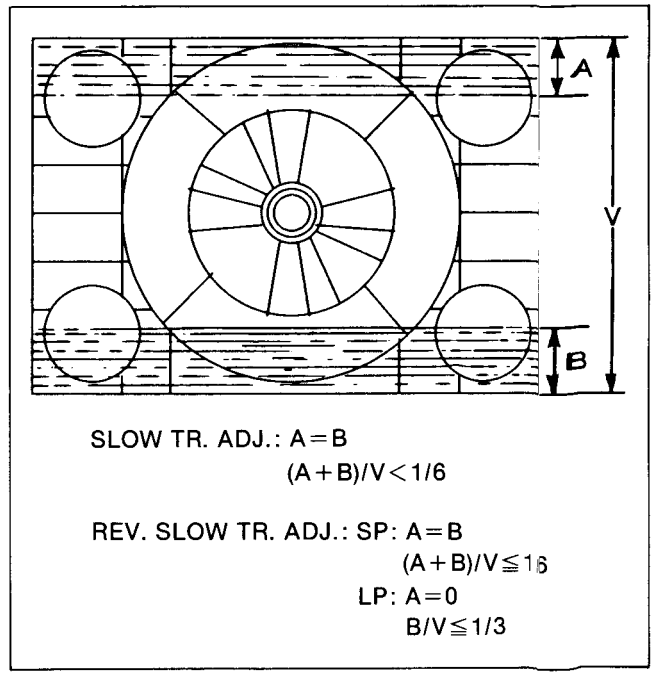

Fig. E5

3. REVERSE SLOW TRACKING ADJUSTMENT (SP and LP mode)

TP	ADJ.	MODE	INPUT
MONITOR SCREEN	VR2019 (SP) VR2018 (LP)	REVERSE SLOW	COLOUR BAR
TAPE	**M. EQ.**	**SPEC.**	
BLANK TAPE	MONITOR TV	SP: A=B (A+B)/V≦1/6 LP: A=0 B/V≦1/3	

1. Connect a cut jumper wire as shown in Fig.E4.
2. Record the colour bar signal in SP(LP) mode for few time and playback the just recorded portion.
3. Place the unit in the reverse slow mode by Shuttle Ring and then press the Tracking "+" and "−" buttons at the same time.
4. Adjust VR2019(SP) (VR2018(LP)) so that the noise bar on the monitor screen becomes minimum. (Detail specifications are shown in Fig. E5)
5. Disconnect a jumper wire.

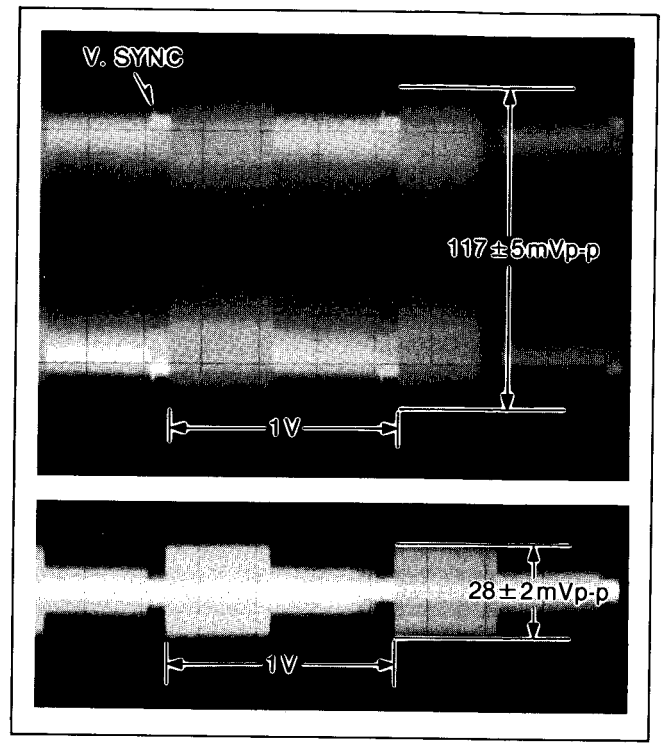

Fig. E6

LUMINANCE & CHROMINANCE SECTION

4. RECORDING CURRENT ADJUSTMENT

TP	ADJ.	MODE	INPUT
TP507 (HOT) TP508 (GND)	VR3001 (Y) VR8001 (C)	SP RECORDING	COLOUR BAR
TAPE	**M. EQ.**	**SPEC.**	
BLANK TAPE	OSCILLO-SCOPE	Y: 117±5 (mVp-p) C: 28±2 (mVp-p)	

1. Record the colour bar signal.
2. Connect the oscilloscope to TP507(HOT) and TP508(GND).
3. Adjust VR3001(Y) so that the luminance level becomes 117+−5mVp−p.
4. Supply +5V DC to Pin 6 of Luminance & Chrominance Pack C.B.A. to reduce luminance component.
5. Adjust VR8001(C) so that the chrominance level becomes 28+−2mVp−p.

5. VIDEO FREQUENCY RESPONSE ADJUSTMENT

TP	ADJ.	MODE	INPUT
PP3902-2	VR3012 (SP) VR3013 (LP)	SP/LP PLAYBACK (SELF RECORDED)	VIDEO SWEEP SIGNAL
TAPE	**M. EQ.**	**SPEC.**	
BLANK TAPE	OSCILLO-SCOPE/ VIDEO SWEEP GENERATOR	0.1MHz: 2.0MHz= 100%: 90~110%	

Note:
Set the markers of the sweep generator to 0.1MHz and 2.0MHz and supply the video sweep signal (200mVp−p) to Line In terminal.

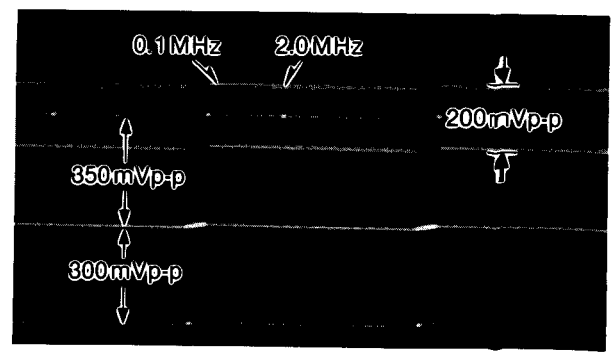

CONDITIONA: BURST SIGNAL OFF
75ohm TERMINATED

Fig. E7

1. Connect a jumper wire between pin 7 of Luminance & Chrominance Pack C.B.A. and GND.
2. Record the Video Sweep Signal in SP (LP) mode for few time and playback the just recorded portion.
3. Connect the oscilloscope to PP3902-2.
4. Adjust VR3012 (SP) (VR3013 (LP)) so that the frequency response (level) becomes 90–110% at 2MHz portion by comparing with 0.1MHz portion.

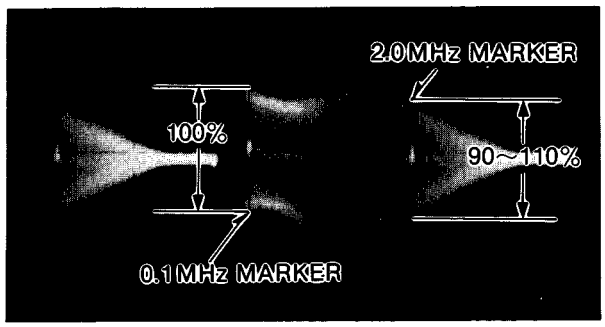

0.1MHz: 2.0MHz = 100%: 90~110%

Fig. E8

6. Y-NR BLANCE ADJUSTMENT

TP	ADJ.	MODE	INPUT
IC302-(17)	VR301	LP RECORDING	COLOUR BAR
TAPE	**M. EQ.**	**SPEC.**	
BLANK TAPE	OSCILLO-SCOPE	MINIMIZED AS POSSIBLE (Less than 50mVp-p)	

Note:
Connect the capacitor(1500pF) between IC302–17 and GND as shown in Fig.E9.

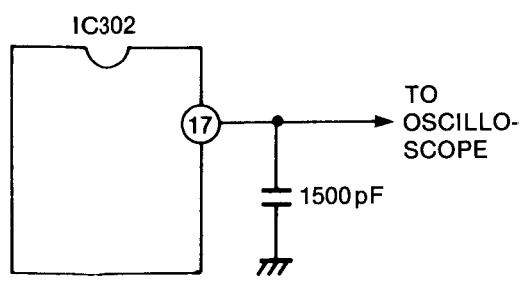

Fig.E9

1. Connect the oscilloscope to IC302–17.
2. Record the colour bar signal in LP mode.
3. Adjust VR301 so that the waveform becomes minimum as follows.
4. Disconnect the capacitor.

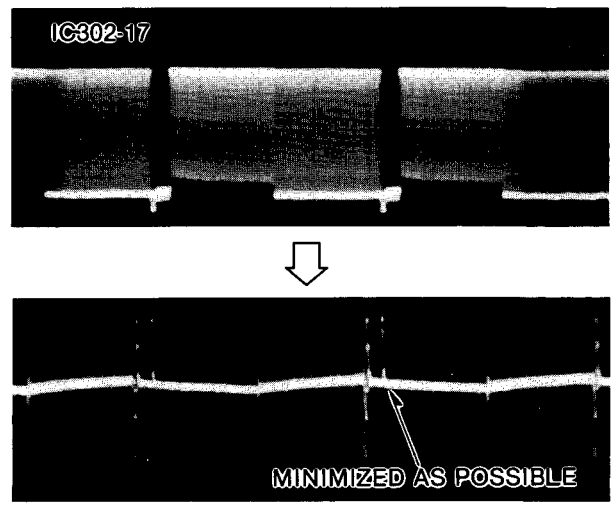

Fig.E10

7. CHROMA RECURSIVE ADJUSTMENT

TP	ADJ.	MODE	INPUT
IC302-(17)	VR802 VR801	SP PLAYBACK	COLOUR BAR
TAPE	**M. EQ.**	**SPEC.**	
BLANK TAPE	OSCILLO-SCOPE	MINIMIZED AS POSSIBLE	

1. Record the colour bar signal in SP mode for few time and playback the just recorded portion.
2. Connect the oscilloscope to IC302–17.
3. Adjust VR801 and VR802 alternately so that the chrominance signal becomes minimum as follows.

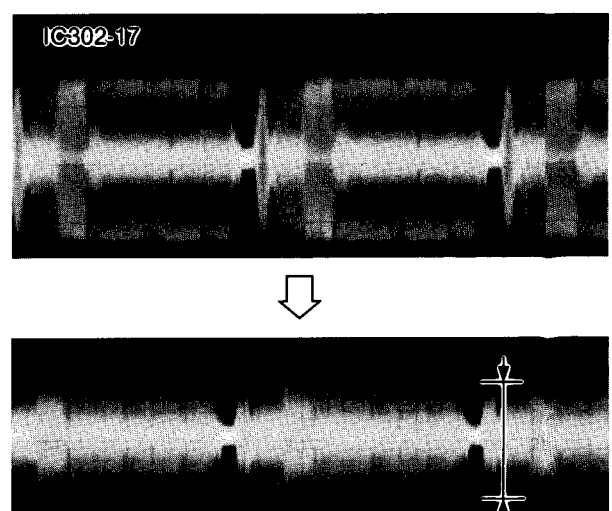

Fig. E11

8. ARTIFICIAL NTSC AFC FREE RUN ADJUSTMENT

TP	ADJ.	MODE	INPUT
IC801-(9)	VR803	STOP	SINEWAVE 8kHz −10dB (316mV)
TAPE	**M. EQ.**	**SPEC.**	
	FREQUENCY COUNTER/ SINEWAVE GENERATOR	15735±100 (Hz)	

1. Supply +5V DC to IC801−27.
2. Supply the sinewave (8kHz/−10dB) to Video Line In terminal.
3. Connect the frequency counter to IC801−9.
4. Turn VR803 fully to clockwise or counter−clockwise which is maximum frequency side.
5. Adjust VR803 so that the frequency becomes 15735+−100Hz.

AUDIO SECTION

9. AUDIO BIAS CURRENT ADJUSTMENT

TP	ADJ.	MODE	INPUT
P4001-4 (HOT) PS4001-6 (GND)	VR4001	SP RECORDING	
TAPE	**M. EQ.**	**SPEC.**	
BLANK TAPE	V.T.V.M	2.9±0.1 [mVrms]	

1. Place the unit in SP Recording mode.
2. Connect the V.T.V.M. to P4001−4(HOT) and PS4001−6(GND).
   (Do not use long cable for connection.)
3. Adjust VR4001 so that the V.T.V.M. level becomes 2.9+−0.1mVrms.

Hi-Fi AUDIO SECTION

10. Hi-Fi E-E LEVEL ADJUSTMENT

TP	ADJ.	MODE	INPUT
LINE OUT	VR4512	STOP	1kHz, −10dB AUDIO SIG.
TAPE	**M. EQ.**	**SPEC.**	
BLANK TAPE	SINEWAVE GENERATOR/ V.T.V.M.	380~420 [mVrms]	

1. Select the STEREO mode by pressing the Audio Out button on the Door Panel. (Both Left and Right indicators on the FIP are lit.)
2. Supply the sinewave (1kHz/−10dB) to Audio Input (L) terminal.
3. Connect the V.T.V.M. to Audio Output (L) terminal.
4. Adjust VR4512 so that the level becomes 380 − 420 mVrms.

11. CARRIER FREQUENCY ADJUSTMENT

TP	ADJ.	MODE	INPUT
IC4501-34 (L) IC4501-47 (R)	VR4501 (L) VR4509 (R) VR4551 (L) VR4552 (R)	SP RECORDING	
TAPE	**M. EQ.**	**SPEC.**	
BLANK TAPE	FREQUENCY COUNTER	NTSC-L : 1.3±0.003 [MHz] NTSC-R: 1.7±0.003 [MHz] PAL-L : 1.4±0.003 [MHz] PAL-R : 1.8±0.003 [MHz]	

1. Place the unit in SP Recording mode.
2. Set the NTSC 4.43 SW on the Front Panel to ON position.
3. Connect the frequency counter to IC4501−34.
4. Adjust VR4501 so that the frequency becomes 1.3+−0.003MHz.
5. Connect the frequency counter to IC4501−47.
6. Adjust VR4509 so that the frequency becomes 1.7+−0.003MHz.
7. Set the NTSC 4.43 SW on the Front Panel to OFF position.
8. Connect the frequency counter to IC4501−34.
9. Adjust VR4551 so that the frequency becomes 1.4+−0.003MHz
10. Connect the frequency counter to IC4501−47.
11. Adjust VR4552 so that the frequency becomes 1.8+−0.003MHz.

12. DEVIATION ADJUSTMENT

TP	ADJ.	MODE	INPUT
BETWEEN VR4502 and R4511 (L) BETWEEN VR4507 and R4561 (R)	VR4502 (L) VR4507 (R)	SP RECORDING	1kHz, −10dB AUDIO SIG.
TAPE	**M. EQ.**	**SPEC.**	
BLANK TAPE	V.T.V.M./ SINEWAVE GENERATOR	120 [mVrms]	

1. Set the NTSC 4.43 SW on the Front Panel to OFF position.
2. Set the output level of the Signal Generator to 1kHz/−10dB and supply it to both Audio Input terminals (L) and (R).
3. Adjust the recording level (Line output) with Hi−Fi Rec Level VR on the Front Panel so that the both audio outputs (L) and (R) are 400mVrms (V.T.V.M.).
4. Connect the V.T.V.M. between VR4502 and R4511.
5. Adjust VR4502 so that the level becomes 120mVrms.
6. Connect the V.T.V.M. between VR4507 and R4561.
7. Adjust VR4507 so that the level becomes 120mVrms.

13. FM B.P.F. ADJUSTMENT

TP	ADJ.	MODE	INPUT
IC4501-33 (L) IC4501-48 (R)	VR4550	PLAYBACK	1.608 MHz 400 mVp-p SINEWAVE SIG.
TAPE	**M. EQ.**	**SPEC.**	
ALIGNMENT TAPE (VFJ8125H3F)	OSCILLO-SCOPE/ SINEWAVE GENERATOR	L ch=R ch	

1. Set the NTSC 4.43 SW to OFF position.
2. Disconnect P551 (from Main C.B.A. to Head AMP Pack)
3. Set the output of the Signal Generator to 1.608MHz/400mVp–p and supply it to PS4003–8.
4. Playback the alignement tape.
5. Connect the oscilloscope to IC4501–33 and 48. (Connect the GND terminal for oscilloscope to GND of FM Pack to reduce the noise.)
6. Adjust VR4550 so that the Lch(pin 33) and Rch(pin 48) are the same level.
7. After this adjustment, connect P551.

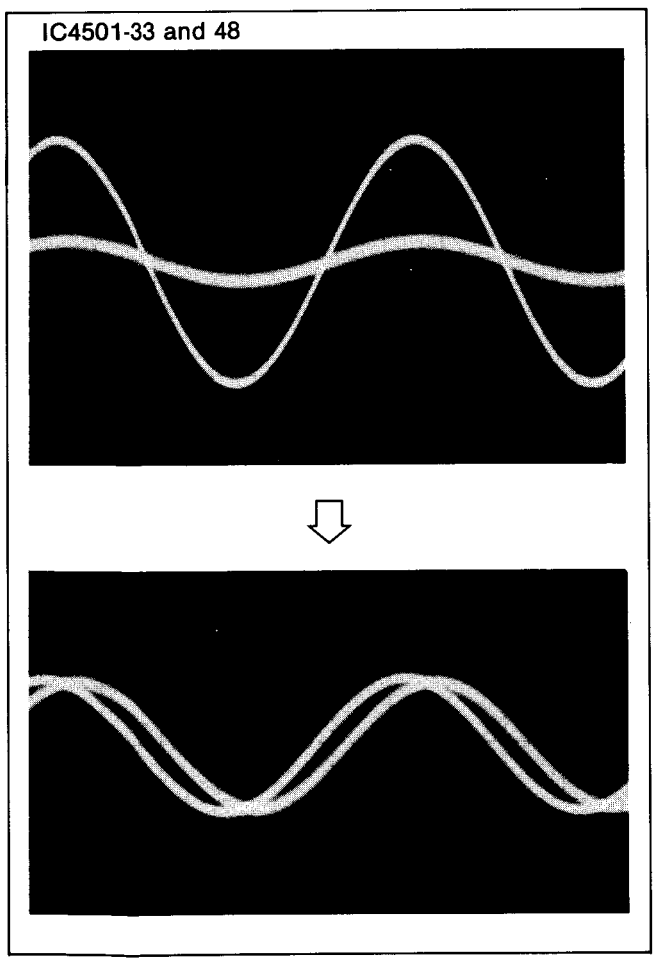

Fig. E12

TIMER SECTION

14. LEVEL METER SENSITIVITY ADJUSTMENT

TP	ADJ.	MODE	INPUT
LEVEL METER ON THE FRONT PANEL	VR7501	STOP	1 kHz, –10 dB AUDIO SIG.
TAPE	**M. EQ.**	**SPEC.**	
		0 [dB] INDICATOR ON THE AUDIO LEVEL METER JUST LIGHTS UP	

1. Select the STEREO mode by pressing the Audio Out button on the Door Panel. (Both Left and Right indicators on the FIP are lit.)
2. Set the output level of the Signal Generator to 1kHz/–10dB and supply it to both Audio Input terminals (L) and (R).
3. Adjust the recording level (Line output) with Hi–Fi Rec Level VR on the Front Panel so that the both audio outputs (L) and (R) are 400mVrms (V.T.V.M.).
4. Adjust VR7501 so that the 0dB of the Level Meter on the FIP just lights up.

15. TIMER REFERENCE CLOCK ADJUSTMENT

TP	ADJ.	MODE	INPUT
TL7501	C7501	STOP	
TAPE	**M. EQ.**	**SPEC.**	
	UNIVERSAL COUNTER	7812.5±0.015 [μsec]	

1. Connect the universal counter to TP7501.
2. Adjust C7501 so that the frequency becomes 7812.5+–0.015us.

Memo:

SECTION 3
ABBREVIATIONS & BLOCK DIAGRAMS

3-1. ABBREVIATIONS

443NT [L]	4.43 NTSC Ⓛ	BIL. [H]	BILINGUAL Ⓗ
A. COMP	AUDIO COMPONENT SIGNAL	BIL/M1 [L]	BILINGUAL Ⓛ
A. COMPO	AUDIO COMPONENT SIGNAL	BS CLOCK	BS CLOCK
A. D.P [L]	AUDIO DUBBING PAUSE Ⓛ	BS DATA	BS DATA
A. D/L [L]	AUDIO DUBBING PAUSE Ⓛ	BS LCH IN	BS L CHANNEL INPUT
A. DEF [S]	AUDIO DEFEAT	BS MIX [H]	BS MIX Ⓗ
A. DEF [S] [L]	AUDIO DEFEAT	BS MON [H]	BS MONITOR Ⓗ
A. DUB P [L]	AUDIO DUBBING PAUSE Ⓛ	BS MONI [H]	BS MONITOR Ⓗ
A. DUB [H]	AUDIO DUBBING Ⓗ	BS RCH IN	BS R CHANNEL INPUT
A. ERASE	AUDIO ERASE	BS VIDEO	BS VIDEO SIGNAL
A. H. SW	AUDIO HEAD SWITCHING PULSE	BS VIDEO/BS1	BS VIDEO SIGNAL
A. HEAD [R]	AUDIO HEAD (REC)	BS [H]	BS Ⓗ
A. HEAD [W]	AUDIO HEAD (PLAY)	BS. LEVEL	BS LEVEL
A. IN [L]	AUDIO INPUT (L)	BS. M [H]	BS MONITOR Ⓗ
A. IN [R]	AUDIO INPUT (R)	BS/VTR [H]	BS/VTR Ⓗ
A. MUT [H]	AUDIO MUTE Ⓗ	BUS CLK	BUS CLOCK
A. MUTE [H]	AUDIO MUTE Ⓗ	BUS LSN	BUS LISTEN
A. OUT [L]	AUDIO OUTPUT (L)	BUS TLK	BUS TALK
A. OUT [R]	AUDIO OUTPUT (R)	BUZZER	BUZZER
A. RF OUT	AUDIO RF SIGNAL OUTPUT	CAP EC	CAPSTAN TORQUE CONTROL
A/VS/S. DATA	AV SW/SERIAL DATA	CAP M GND	CAPSTAN MOTOR GND
AC ONLINE	AC ONLINE	CAP. ET	CAPSTAN TORQUE CONTROL
AC. O/EE. H	AC ONLINE/EE Ⓗ	CAP. FG1	CAPSTAN FG1 PULSE
AFC S C	AFC S CURVE	CAP. FG2	CAPSTAN FG2 PULSE
AFC [S]	AFC S CURVE	CAS. SW	CASSETTE SW
AFC. DEF	AFC DEFEAT	CCN	PLAYBACK CONTROL SIGNAL (−)
ARFC OUT	AUDIO RF SIGNAL OUTPUT	CCP	PLAYBACK CONTROL SIGNAL (+)
ART. V	ARTIFICIAL VERTICAL SYNC SIGNAL	CHM	CONTROL SIGNAL (+)
ART. V. MM	ARTIFICIAL VERTICAL SYNC SIGNAL MONO MULTI	CHP	CONTROL SIGNAL (−)
		CINEM [L]	CINEMA Ⓛ
ART. V/H/N	ARTIFICIAL VERTICAL SYNC SIGNAL Ⓗ/NORMAL	CINEMA [L]	CINEMA Ⓛ
		CINEMA/MIX	CINEMA/MIX
AT. V/H/N	ARTIFICIAL VERTICAL SYNC SIGNAL	CKL	RATCH LOCK
ATSW/TEST/NOR/SE	TEST/NORMAL/SERVICE	CKS	SHIFT LOCK
AUDIO IN [L]	AUDIO INPUT (L)	CL	CLOCK
AUDIO IN [R]	AUDIO INPUT (R)	CLK	CLOCK
AUDIO OUT [L]	AUDIO OUTPUT (L)	CLK (C.G)	CLOCK
AUDIO OUT [R]	AUDIO OUTPUT (R)	CLOCK. IN	CLOCK INPUT
AUDIO SELECT [H]	AUDIO SELECT Ⓗ	CLP	CLAMP
AUDIO. L	AUDIO (L)	COL/B/W/NOR	COLOUR/BLACK & WHITE/NORMAL
AUDIO. R	AUDIO (R)	COLOR [H]	COLOUR Ⓗ
AV CNT	AV CONTROL	CONV	CONVERTOR
AV CTL	AV CONTROL	CS	CHIP SELECT
AV CTL/S. CLK	AV CONTROL/SERIAL CLOCK	CTL GND	CONTROL GND
AV. C.M.	AV CONTROL MODE	CTL HEAD [+]	CONTROL HEAD (+)
AVCNT/METER. R	AV CONTROL/LEVEL METER (R)	CTL HEAD [−]	CONTROL HEAD (−)
AVSW/METER. L	AV SW/LEVEL METER (L)	CTL [+]	CONTROL HEAD (+)
B MODE. H	B MODE Ⓗ	CTL [−]	CONTROL HEAD (−)
B.G.P	BURST GATE PULSE	CUE BIAS	CUE BIAS
BACKUP 5V	BACK UP 5V	CURRENT LIM	CURRENT LIMMITER
BAND. U.E.	BAND U	CYL ET	CYLINDER TORQUE CONTROL
BANDVL. D	BAND VL	CYL GND	CYLINDER GND
BI/MI [L]	BILINGUAL/MIX Ⓛ	D.F.M. REC [H]	DELAIED FM RECORDING Ⓗ
BIL	BILINGUAL	D. FM REC [L]	DELAIED FM RECORDING Ⓛ
BIL [L]	BILINGUAL Ⓛ	D. GND	DIGITAL GND

D. REC [H]	DELAYED RECORDING Ⓗ	H. SYNC	HORIZONTAL SYNC
D4/S. LED	D4/STILL LED	H. AMP. SW	HEAD AMP SW PULSE
D4/STILLED	D4/STILL LED	H. P <R>	HEAD PHONE (R)
DAC [CLK]	TUNER DAC (CLOCK)	H. P <L>	HEAD PHONE (L)
DAC/FSCS	TUNER DAC/FS CHIP SELECT	H. P GND	HEAD PHONE GND
DAREC [H]	DELAYED AUDIO RECORDING Ⓗ	H. P OUT [L]	HEAD PHONE OUTPUT (L)
DATA	DATA	H. P OUT [R]	HEAD PHONE OUTPUT (R)
DECODER [L]	DECODER (L)	H. SW	HEAD SW PULSE
DECODER [R]	DECODER (R)	HEAD PHONE [L]	HEAD PHONE (L)
DEW	DEW	HEAD PHONE [R]	HEAD PHONE (R)
DEW SNS	DEW SENSOR	HEAD SW	HEAD SW
DFMRE [H]	DELAYED FM AUDIO RECORDING Ⓗ	HEATER [+]	HEATER (+)
E. REC 5V	EXCEPT RECORDING 5V	HEATER [−]	HEATER (−)
EC	ERR0R TORQUE CONTROL	HSS	HORIZONTAL SYNC SIGNAL
ECR	ERROR TORQUE CONTROL	HTR [+]	HEATER (+)
	REFERENCE VOLTAGE	HTR [−]	HEATER (−)
EDT TRIG [L]	EDIT TRIGGER Ⓛ	I RFE	REFERENCE CURRENT
EDIT [H]	EDIT Ⓗ	ICL	CONTROL AGC CIRCUIT
EE [H]	EE Ⓗ	IF	INTERMEDIATE FREQUENCY
EE [H]/INS [M]	EE Ⓗ/INSERT Ⓜ	IN SELA1	INPUT SELECT A1 POSITION
EE. VV. TR	EE/VV/TRICK PLAY	IN SELA2	INPUT SELECT A2 POSITION
EJECT. PO	EJECT POSITION	IN SELA3	INPUT SELECT A3 POSITION
EJECT/VDET	EJECT/REVERSE SLOW LOCK	INS L/R [L]	INSERT Lch/Rch Ⓛ
ENV. SEL	ENVELOPE SELECT	INS. [H]	INSERT Ⓗ
ENVE. OUT	ENVELOPE OUTPUT	INSEL A1	INPUT SELECT A1 POSITION
ENVE. SEL	ENVELOPE SELECT	INSEL A2	INPUT SELECT A2 POSITION
ENV SELECT	ENVELOPE SELECT	INSERT	INSERT
EP [H]	LP Ⓗ	INSERT [H]	INSERT Ⓗ
EP/LP [H]	LP Ⓗ	IO CS	INPUT/OUTPUT CHIP SELECT
EP/LP/SP	LP/SP	JOG1	JOG1
EP/SS [H]	LP/SLOW/STILL/STOP Ⓗ	JOG S3 LED/FOWRD	JOG LED/FORWARD LED
EPROMCS	EPROM CHIP SELECT	JOG/F. LED	JOG LED/FORWARD LED
EX. REC 5V	EXCEPT RECORDING 5V	JSB [H]	JSB Ⓗ
FF/REW [L]	FIRST FORWARD/REWIND Ⓛ	JST. CLCK	JUST CLOCK
FG1 IN	FG1 PULSE INPUT	JST. CLK	JUST CLOCK
FG2 IN	FG2 PULSE INPUT	JST. CLOCK	JUST CLOCK
FILTER ADJUSTMEN	FILTER ADJUSTMENT	L. OUT	Lch OUTPUT
FLY ERASE [H]	FLYING ERASE HEAD ON Ⓗ	L. CH [H]	Lch Ⓗ
FLY ON [H]	FLYING ERASE E HEAD ON Ⓗ	L. CH [L]	Lch Ⓛ
FLY. E [H]	FLYING ERASE HEAD ON Ⓗ	LED (MAIN)	LED (MAIN)
FM MUT [H]	FM AUDIO MUTE Ⓗ	LED (STEREO)	LED (STEREO)
FM MUTE [H]	FM AUDIO MUTE Ⓗ	LED (SUB)	LED (SUB)
FM OUT [L]	FM OUTPUT (L)	LED CKL	LED SERIAL CLOCK
FM OUT [R]	FM OUTPUT (R)	LED CKS	LED SERIAL CLOCK
FM PACK OUT [L]	FM PACK OUTPUT (L)	LED DATA	LED SERIAL DATA
FM PACK OUT [R]	FM PACK OUTPUT (R)	LINE IN 1 [L]	LINE INPUT 1 (L)
FM/BS SEL [L]	FM/BS SELECT (L)	LINE IN 1 [R]	LINE INPUT 1 (R)
FM/BS SEL [R]	FM/BS SELECT (R)	LINE IN 2 [L]	LINE INPUT 2 (L)
FS. CLK	FS CLOCK	LINE IN 2 [R]	LINE INPUT 2 (R)
FUL. E [H]	FULL ERASE HEAD ON Ⓗ	LINE IN V	LINE INPUT VIDEO
FULL. E [H]	FULL ERASE HEAD ON Ⓗ	LINE IN [L]	LINE INPUT (L)
FULL. E. 12V	FULL ERASE 12V	LINE IN [R]	LINE INPUT (R)
GND [A]	GND (ANALOGUE)	LINE OUT [L]	LINE OUTPUT (L)
GND [TU]	GND (TUNER)	LINE OUT [R]	LINE OUTPUT (R)
GND/N. SW. 12V	GND/NON SW 12V	LP [H]	LP Ⓗ

LPTRI [L]	LP TRICK PLAY Ⓛ	P. OFF [L]	POWER OFF Ⓛ
Lch/A. DUB	Lch/AUDIO DUBBING	PAL [H]	PAL Ⓗ
M GND	MOTOR GND	PAL [L]/NTSC [H]	PAL Ⓛ/NTSC Ⓗ
M REG	MOTOR REGULATOR	PB ADJ OUT	PLAYBACK ADJUST OUTPUT
MAIN OUT	MAIN OUTPUT	PB OUT	PLAYBACK OUTPUT
MAIN [L]	MAIN Ⓛ	PB. H	PLAYBACK Ⓗ
MAIN/MONO	MAIN/MONAURAL	PFG	PG/FG
MAX IN	MAXIMAM INPUT	PHOTSN +B	PHOTO SENSOR +B
MES [H]	MESECAM Ⓗ	PICT. CNT	PICTURE CONTROL
MESE [H]	MESECAM Ⓗ	PLAY LED/RVS LED	PLAY LED/REVERSE LED
MESE [L]	MESECAM Ⓛ	PLAY. PO	PLAY POSITION
METER 5V	LEVEL METER 5V	PLAY/R. LED	PLAY LED/REVERSE LED
METER [L]	LEVEL METER (L)	PLY/DEW	PLAY/DEW Ⓗ
METER [R]	LEVEL METER (R)	POWER OFF [L]	POWER OFF Ⓛ
METER. L/AVS	LEVEL METER (L)	PREROLL [H]	PREROLL Ⓗ
METER. R/AVC	LEVEL METER (R)	PWRFAIL	POWER FAILURE DETECT
MI/BI [L]	MIX Ⓗ/BILIGUAL	R. CH [H]	Rch Ⓗ
MIC GND	MIC GND	R. CH [L]	Rch Ⓛ
MIC IN	MIC INPUT	R. ST	RESET
MIC IN [L]	MIC INPUT (L)	R/S/F	REVERSE Ⓗ/STOP Ⓜ/FORWARD Ⓛ
MIC IN [R]	MIC INPUT (R)	RCH [H]	Rch Ⓗ
MIC [H]	MIC Ⓗ	REC 12V	RECORDING 12V
MIX [H]	MIX Ⓗ	REC CHROMA	RECORDING CHROMINANCE SIGNAL
MIX [H]/CINEMA [L]	MIX Ⓗ/CINEMA SOUND Ⓛ	REC H	RECORDING Ⓗ
MIX/CINE	MIX Ⓗ/CINEMA SOUND Ⓛ	REC IN	RECORDING INPUT
MIX/CINEMA [L]	MIX Ⓗ/CINEMA SOUND Ⓛ	REC OUT [L]	RECORDING OUTPUT Ⓛ
MN. H/M. L	MONAURAL Ⓗ/MAIN Ⓛ	REC START	RECORDING START
MN. H/MAI. L	MONAURAL Ⓗ/MAIN Ⓛ	REC VR [C]	RECORDING VOLUME (COMMON)
MN2/MES. L	MONAURAL 2/MESECAM Ⓛ	REC VR [L]	RECORDING VOLUME (L)
MODE SEL	AUDIO MODE SELECT	REC VR [R]	RECORDING VOLUME (R)
MODE SW	AUDIO MODE SW	REC Y	RECORDING LUMINANCE SIGNAL
MODE. S. IN	AUDIO MODE SELECT INPUT	REC [H]	RECORDING Ⓗ
MODE. S. OUT	AUDIO MODE SELECT OUTPUT	REC. C	RECORDING CHROMINANCE SIGNAL
MONO [H]	MONAURAL Ⓗ	REC. Y	RECORDING LUMINANCE SIGNAL
MONO [H]/MAIN [L]	MONAURAL Ⓗ/MAIN Ⓛ	REC/EE CTL	RECORDING/EE CONTROL
MONO2 [L]	MONAURAL 2	REEL-T	REEL PULSE (TAKE-UP)
MONO2/MESE [FM(L)]	MONAURAL 2/MESECAM (FM Ⓛ)	REEL-S	REEL PULSE (SUPPLY)
MOTOR GND	MOTOR GND	REGULATOR FILTER	REGULATOR FILTER
MUTE	MUTE	RESET	RESET
N. A. REC [L]	NORMAL AUDIO RECORDING	REV M F/R	REVIEW MOTOR FORWARD/REVERSE
N. SW 12V	NON SW 12V		
N. SW. 5. DET	NON SW 5V DETECT	REV M V1	REVIEW MOTOR V1
NICAM	NICAM	REV M V2	REVIEW MOTOR V2
NICAM [L]	NICAM Ⓛ	REV MOTOR F/R	REVIEW MOTOR FORWARD/REVERSE
NOL [H]	PAL Ⓗ/4.43 NTSC Ⓜ/3.58 NTSC Ⓛ		
NOR/SOFT [H]	NORMAL/SOFT TAPE PLAY Ⓗ	REV MOTOR V1	REVIEW MOROR V1
NORMAL [H]	NORMAL Ⓗ	REV MOTOR V2	REVIEW MOTOR V2
NR BIAS	NR BIAS	REV MOTOR [+]	REVIEW MOTOR (+)
NTSC [L]	NTSC Ⓛ	REV MOTOR [−]	REVIEW MOTOR (−)
OCH	CONTROL AGC CIRCUIT	REV. M. GND	REVIEW MOTOR GND
OUT	OUTPUT	RF. CHROMA	RF CHROMINANCE SIGNAL
P-OFF [H]	POWER OFF Ⓗ	RF OUT	RF OUTPUT
P-OFF [L]	POWER OFF Ⓛ	RF Y	RF LUMINANCE SIGNAL
P. FAIL	POWER FAILURE DETECT	RF. Y. IN	RF LUMINANCE SIGNAL INPUT
P. OFF [H]	POWER OFF Ⓗ	RF. Y. OUT	RF LUMINANCE SIGNAL OUTPUT

ROTAR. SW	ROTARY SW
ROTARY	ROTARY SW
RST	RESET
RST [L]	RESET Ⓛ
Rch/INST	Rch/INSERT
S IN	SERIAL DATA INPUT
S OUT	SERIAL DATA OUTPUT
S-PHOTO	SUPPLY PHOTO TRANSISTOR
S-RL. PLS	SUPPLY REEL PULSE
S. CLK	SERIAL CLOCK
S. CLK/AV	SERIAL CLOCK/AV
S. DATA	SERIAL DATA
S. DATA/A	SERIAL DATA
S. PHOTO	SUPPLY PHOTO TRANSISTOR
S. TAB [L]	SAFETY TAB SW ON Ⓛ
S/P/N	SECAM/PAL/NTSC
SC IN	SERIAL CLOCK INPUT
SC OUT	SERIAL CLOCK OUTPUT
SCK SELECT	SERIAL CLOCK SELECT
SEL OUT [L]	SELECT OUTPUT (L)
SEL OUT [R]	SELECT OUTPUT (R)
SHUTTLE 1	SHUTTLE 1
SIF	SOUND INTERMEDIATE FREQUENCY
SLMUT [H]	INPUT SELECT MUTE Ⓗ
SLNID [+]	SOLENOID (+)
SLNID [−]	SOLENOID (−)
SLW TR. MM	SLOW TRACKING MONO MULTI
SLW TR. REF	SLOW TRACKING REFERENCE VOLTAGE
SNS. GND	SENSOR GND
SOFT [H]	SOFT TAPE PLAY Ⓗ
SOFT [H]/NORMAL	SOFT TAPE PLAY Ⓗ/NORMAL Ⓗ
SOLENOID ON [L]	SOLENOID ON Ⓛ
SP [H]	SP Ⓗ
SP/L/SLP	SP/LP
SSS [L]	SLOW/STILL/STOP
STEREO LED	STEREO LED
STEREO [H]	STEREO Ⓗ
STEREO [L]	STEREO Ⓛ
STOP. PO	STOP POSITION
STOP/5V	STOP POSITION/5V
STOP1/TAPE SEL	STOP1 POSITION/TAPE SELECT
STOP1/PAL:ST	STOP1 POSITION/PAL
STOP2. PO	STOP 2 POSITION
STOP2/S-TAB	STOP 2 POSITION/SAFETY TAB SW
STREO [H]	STEREO Ⓗ
SUB BIAS	SUB BIAS
SUB. SW	SUB SW
SVHS CAS [L]	S-VHS CASSETTE Ⓛ
SW. 5. DET	SW 5V DETECT
SYNC [L]	SYNC Ⓛ
SYSCON 5V	SYSTEM CONTROL 5V
SYSTEM	SYSTEM SW
T-PHOTO	TAKE-UP PHOTO TRANSISTOR
T-RL. PLS	TAKE-UP REEL PULSE

T. BUSCLK	TIMER BUS CLOCK
T. BUSLSN	TIMER BUS LISTEN
T. BUSTLK	TIMER BUS TALK
T. END [L]	TAPE END Ⓛ
T. PHOTO	TAKE-UP PHOTO TRANSISTOR
TAPE END [L]	TAPE END Ⓛ
TAPE END [L]/CAM	TAPE END Ⓛ/CAMERA PAUSE
TEST	TEST MODE
TPZ	TRAPEZOIDAL WAVE CIRCUIT
TRIC [L]	TRIC PLAY Ⓛ
TRICK [L]	TRIC PLAY Ⓛ
TRK. ENV	AUTO TRACKING ENVELOPE DETECT
TU. AUDIO	TUNER AUDIO
TU. GND	TUNER GND
TU. V. IN	TUNER VIDEO SIGNAL INPUT
TU. VIDEO	TUNER VIDEO
TUN NOR IN	TUNER NORMAL INPUT
TUN R	TUNER AUDIO (R)
TUN. AUDIO IN	TUNER AUDIO INPUT
TUNER 12V	TUNER 12V
TUNER L	TUNER AUDIO (L)
TUNER V IN	TUNER VIDEO SIGNAL INPUT
TUNER [L]	TUNER AUDIO (L)
TUNER [N]	TUNER AUDIO (NORMAL)
TUNER [R]	TUNER AUDIO (R)
TUNER. 12	TUNER 12V
TUOFF [H]	TUNER OFF Ⓗ
TV. AUDIO	TV AUDIO
TV/VTR	TV/VTR
TXTON [L]	TEXT ON Ⓛ
U. REG45V	UNREGULATOR 45V
UNREG	UNREGULATOR
UNREG19V	UNREGULATOR 19V
V. REF	REFERENCE VOLTAGE
V. EE [H]	VIDEO EE Ⓗ
V. EE [L]	VIDEO EE Ⓛ
VCO REF	RERERENCE OSCILLATER
VD. IN	VIDEO SIGNAL INPUT
VD. OUT	VIDEO SIGNAL OUTPUT
VIDEO EE [L]	VIDEO EE Ⓛ
VIDEO IN	VIDEO SIGNAL INPUT
VIDEO OUT	VIDEO SIGNAL OUTPUT
VM	MOTOR VOLTAGE
VM DOWN [L]	MOTOR VOLTAGE DOWN Ⓛ
VSS	VERTICAL SYNC SIGNAL
VTR [H]	VTR Ⓗ
VTR. 12V	VTR 12V
X IN	OSCILLATOR INPUT
X OUT	OSCILLATOR OUTPUT

3-2. LUMINANCE & CHROMINANCE BLOCK DIAGRAM

MAIN SIGNAL PATH IN REC MODE — MAIN SIGNAL PATH IN PLAYBACK MODE

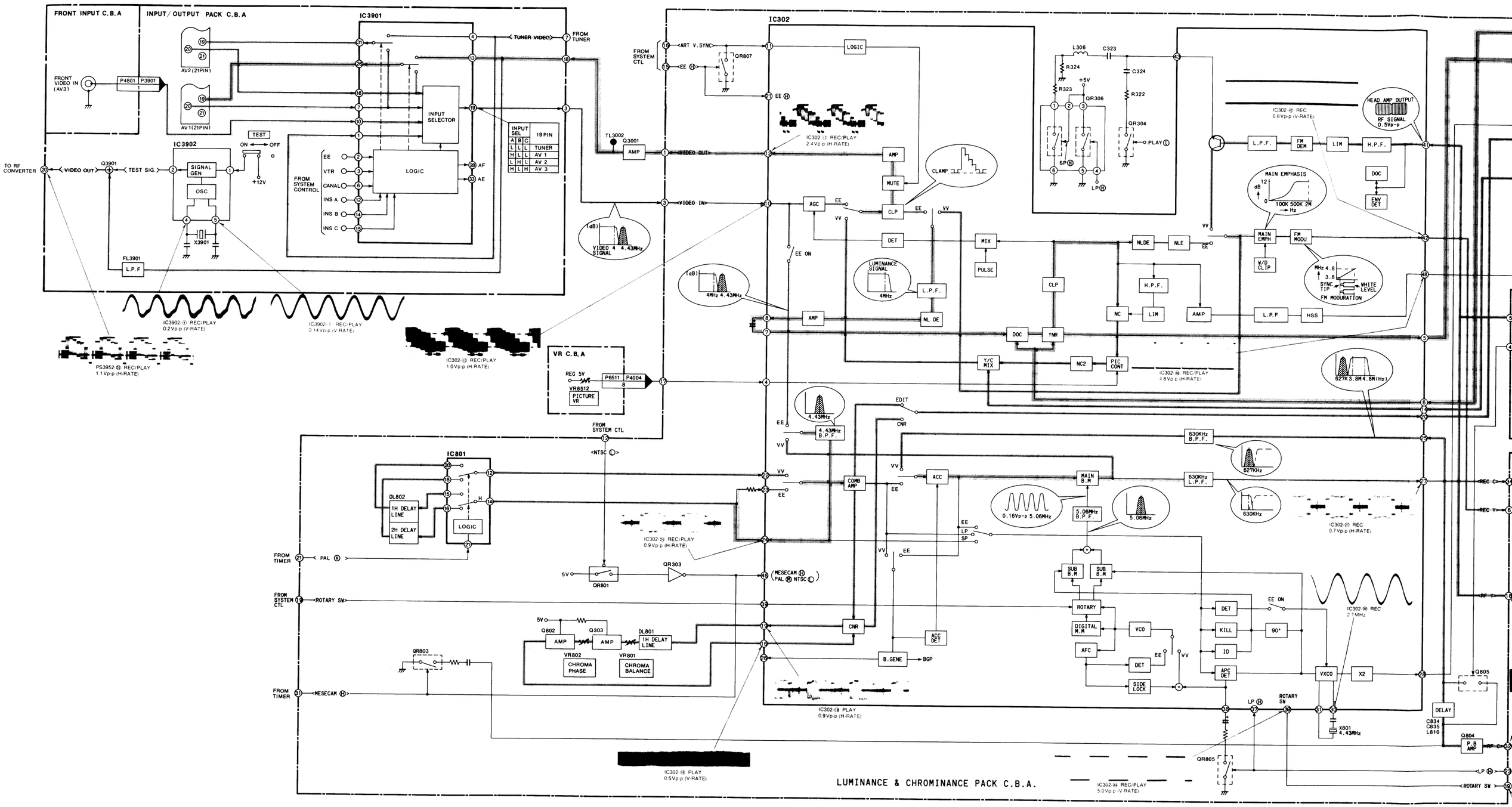

YBACK MODE

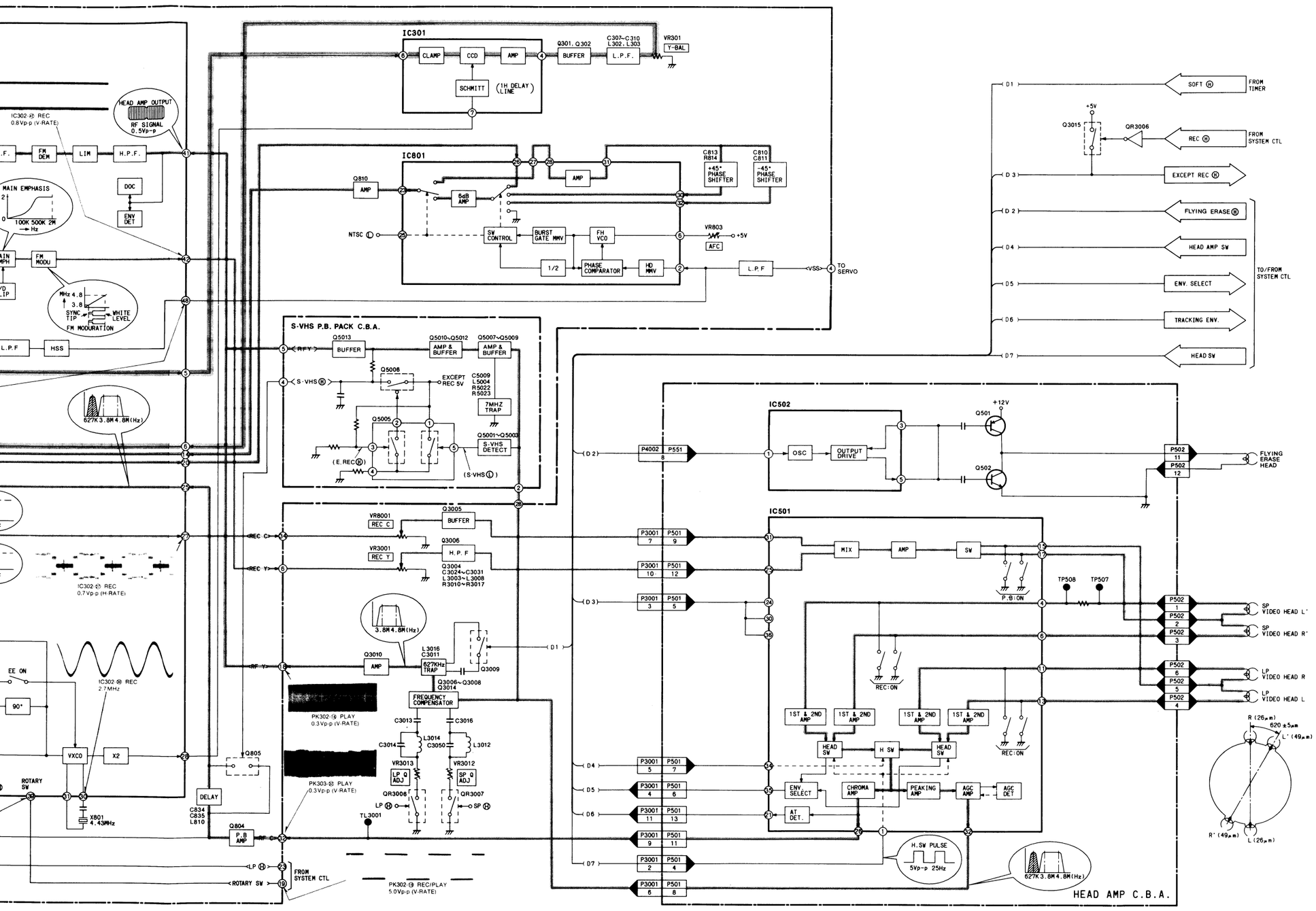

SYMBOL	TRUTH VALUE TABLE
INVERTER	IN (a) H L OUT (b) L H
COMPARTOR	IN (a) (b) (a)>(b) (a)<(b) OUT (c) H L
AND CIRCUIT 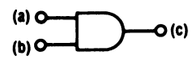	IN (a) L L H H (b) L H L H OUT (c) L L L H
OR CIRCUIT	IN (a) L L H H (b) L H L H OUT (c) L H H H
THREE STATES BUFFER 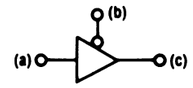	IN (a) H L H or L (b) L L H OUT (c) H L ※ ※ High Impedance
TR. SW (NPN TYPE) 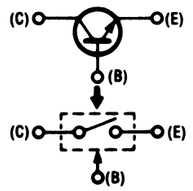	BASE H L TR. SW ON OFF
TR. SW (PNP TYPE) 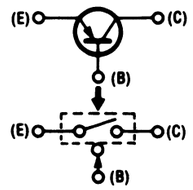	BASE H L TR. SW OFF ON
R-S TYPE FLIP-FLOP 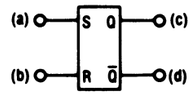	IN (a) L L ⎍ (b) L ⎍ L OUT (c) ※ L H (d) ◆ H L ※ Initial condition is maintained. ◆ Initial condition is reversed.

3-3. Hi-Fi AUDIO BLOCK DIAGRAM

MAIN SIGNAL PATH IN REC MODE

MAIN SIGNAL PATH IN PLAYBACK MODE

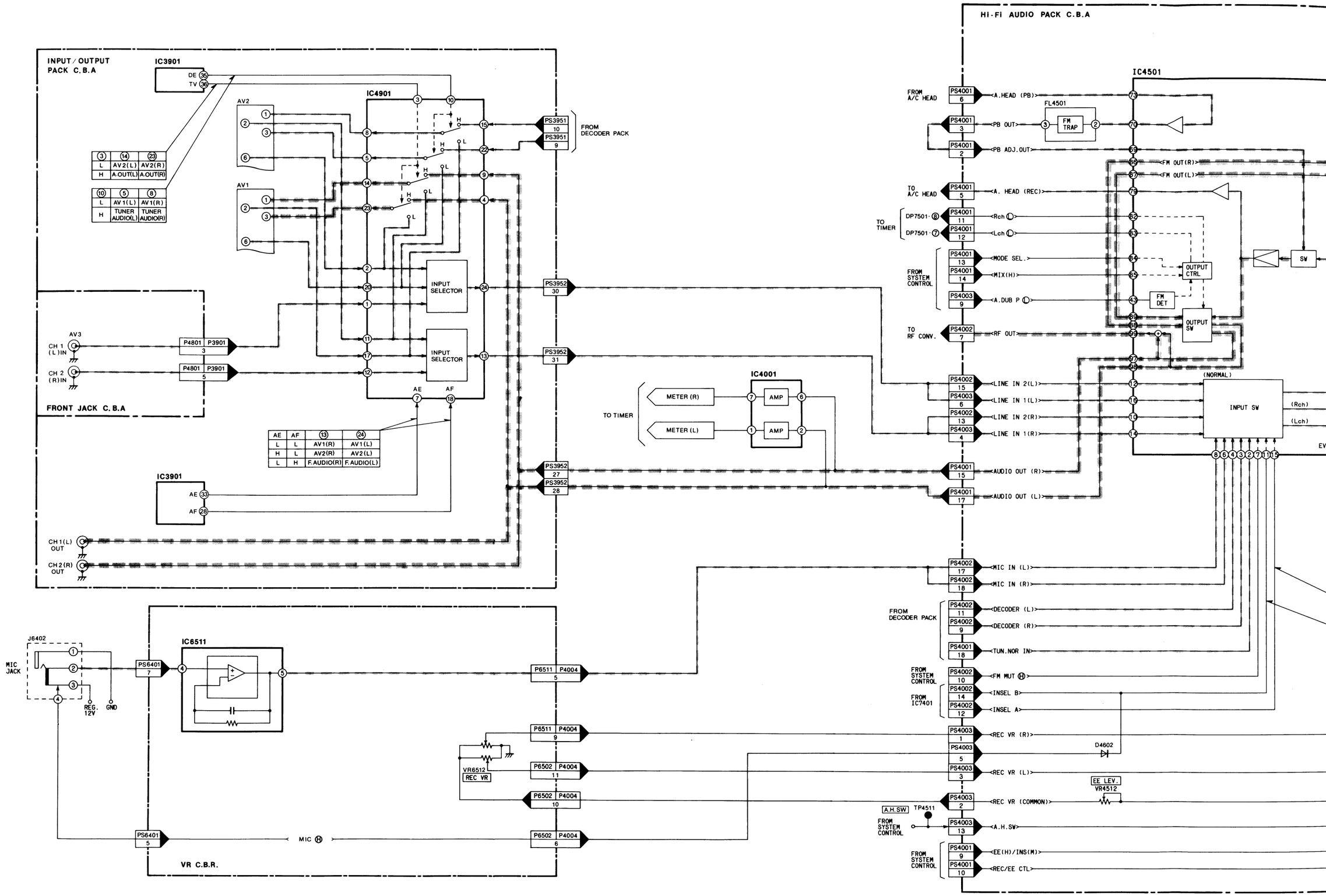

L PATH IN PLAYBACK MODE

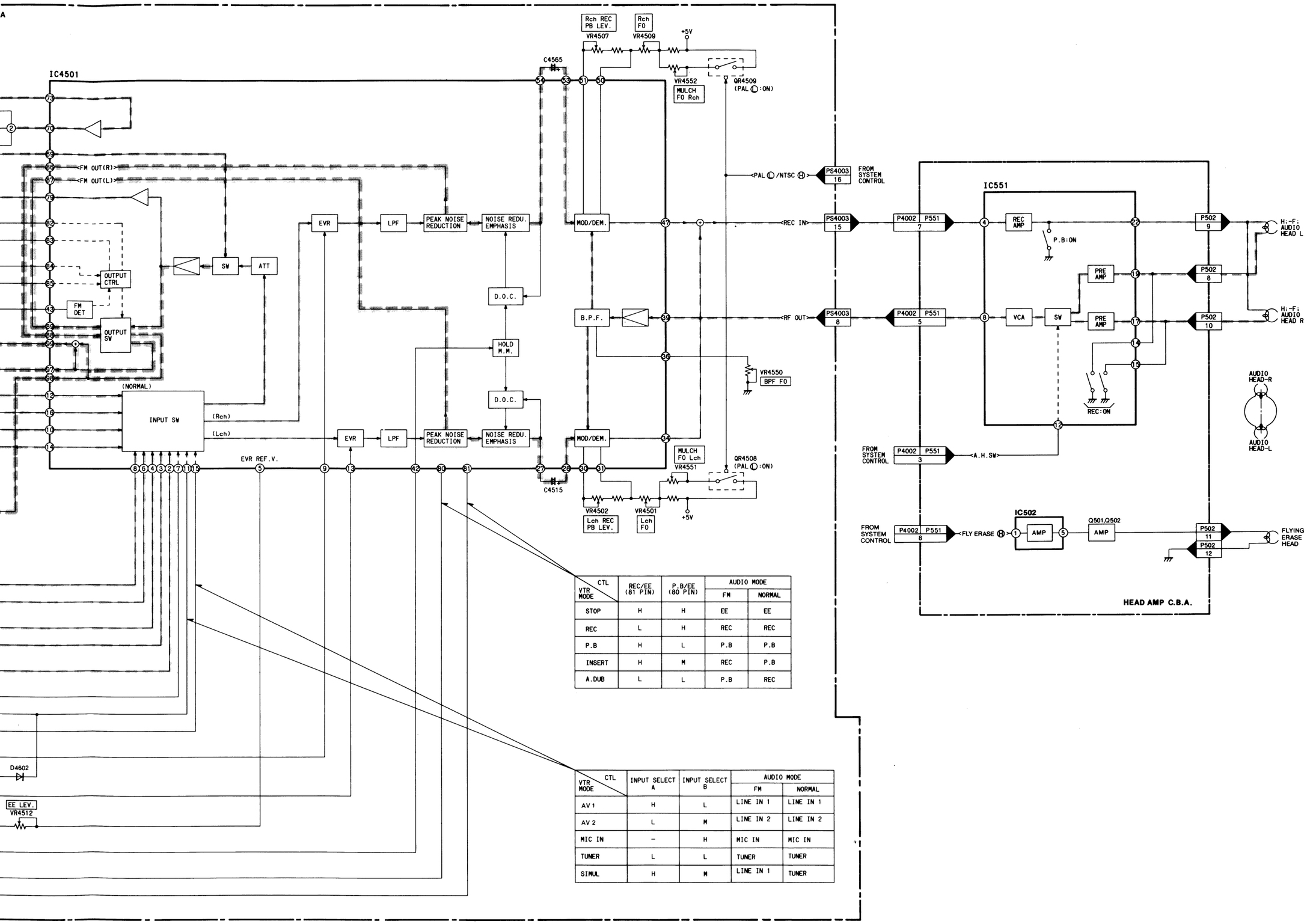

VTR MODE \ CTL	REC/EE (81 PIN)	P.B/EE (80 PIN)	AUDIO MODE	
			FM	NORMAL
STOP	H	H	EE	EE
REC	L	H	REC	REC
P.B	H	L	P.B	P.B
INSERT	H	M	REC	P.B
A.DUB	L	L	P.B	REC

VTR MODE \ CTL	INPUT SELECT A	INPUT SELECT B	AUDIO MODE	
			FM	NORMAL
AV 1	H	L	LINE IN 1	LINE IN 1
AV 2	L	M	LINE IN 2	LINE IN 2
MIC IN	–	H	MIC IN	MIC IN
TUNER	L	L	TUNER	TUNER
SIMUL	H	M	LINE IN 1	TUNER

3-4. SYSTEM CONTROL & SERVO BLOCK DIAGRAM

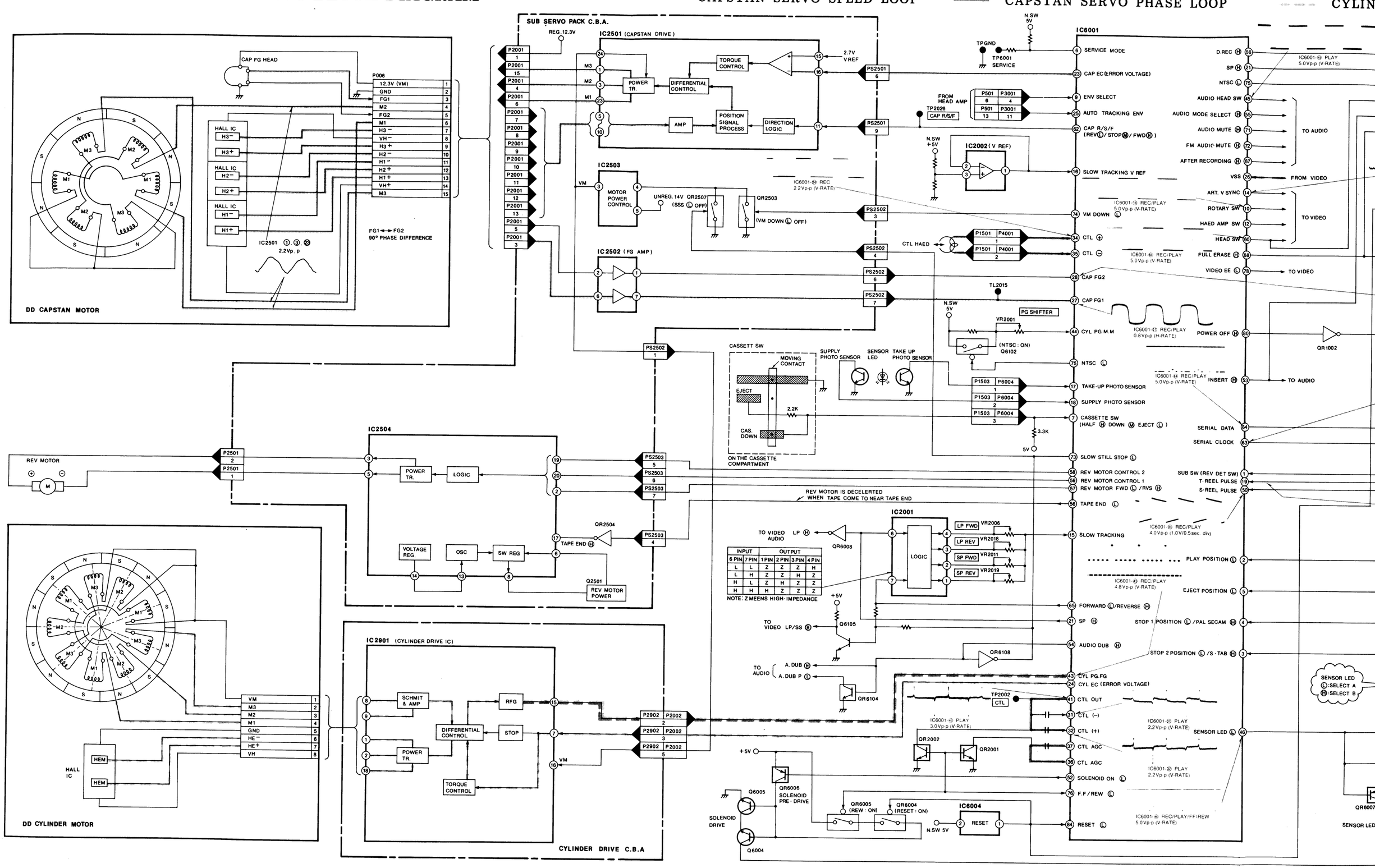

LOOP — CAPSTAN SERVO PHASE LOOP — CYLINDER SERVO SPEED LOOP — CYLINDER SERVO PHASE LOOP

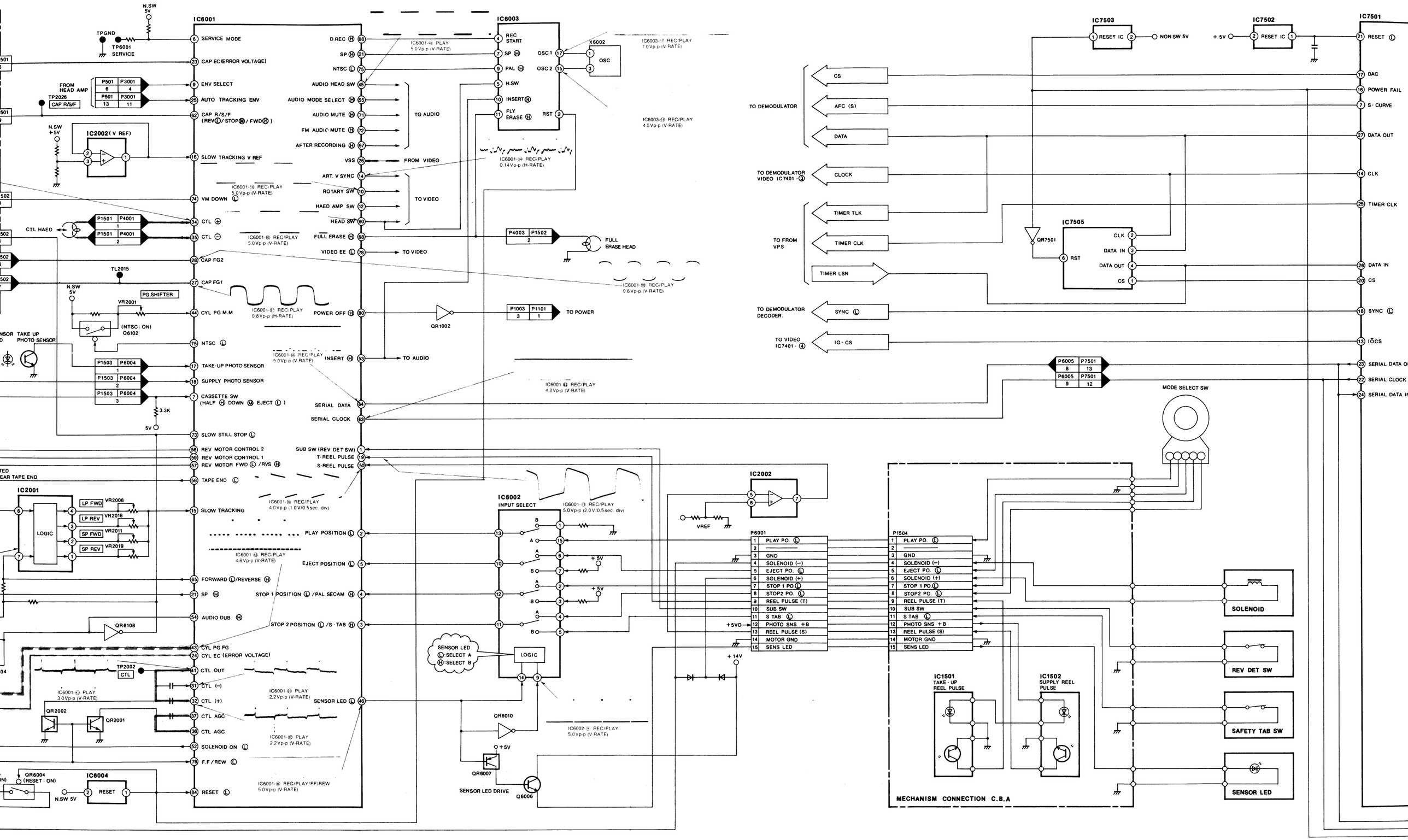

-- CYLINDER SERVO PHASE LOOP

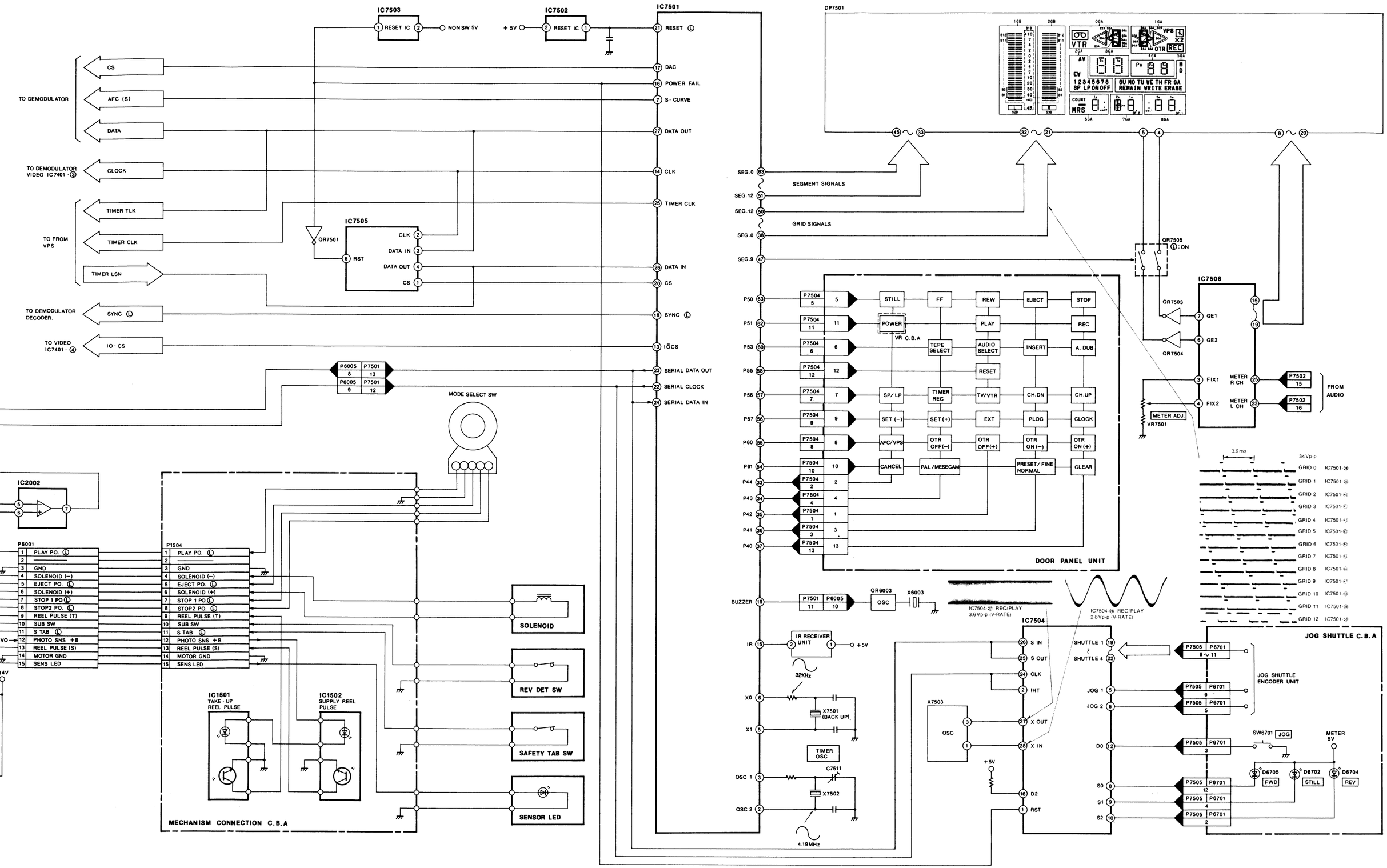

SECTION 4
SCHEMATIC DIAGRAM
4-1. SYSTEM CONTROL & SERVO SECTION IN MAIN SCHEMATIC DIAGRAM

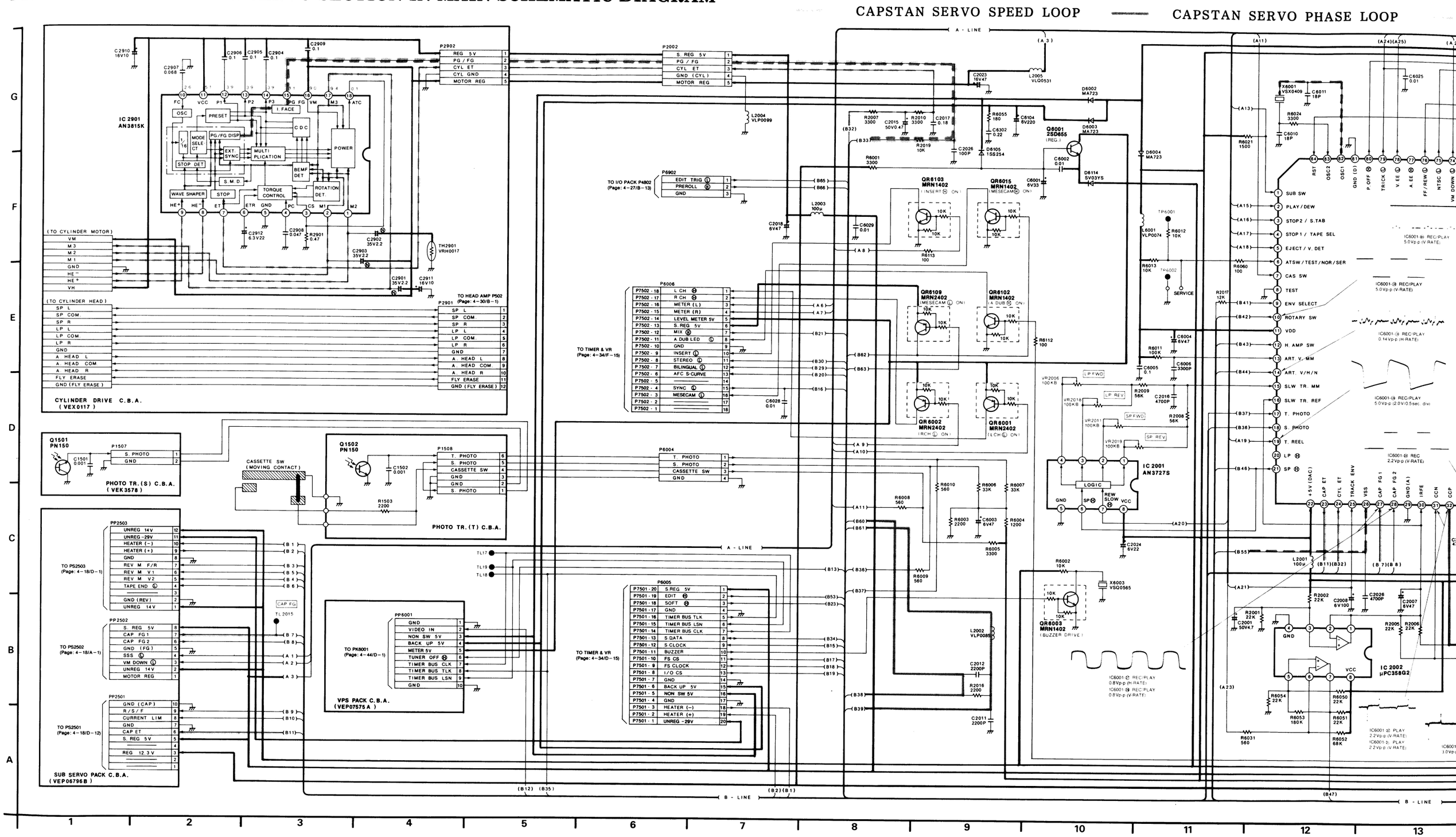

CAPSTAN SERVO SPEED LOOP —— CAPSTAN SERVO PHASE LOOP CYLINDER SERVO SPEED LOOP - - - CYLINDER SERVO PHASE LOOP

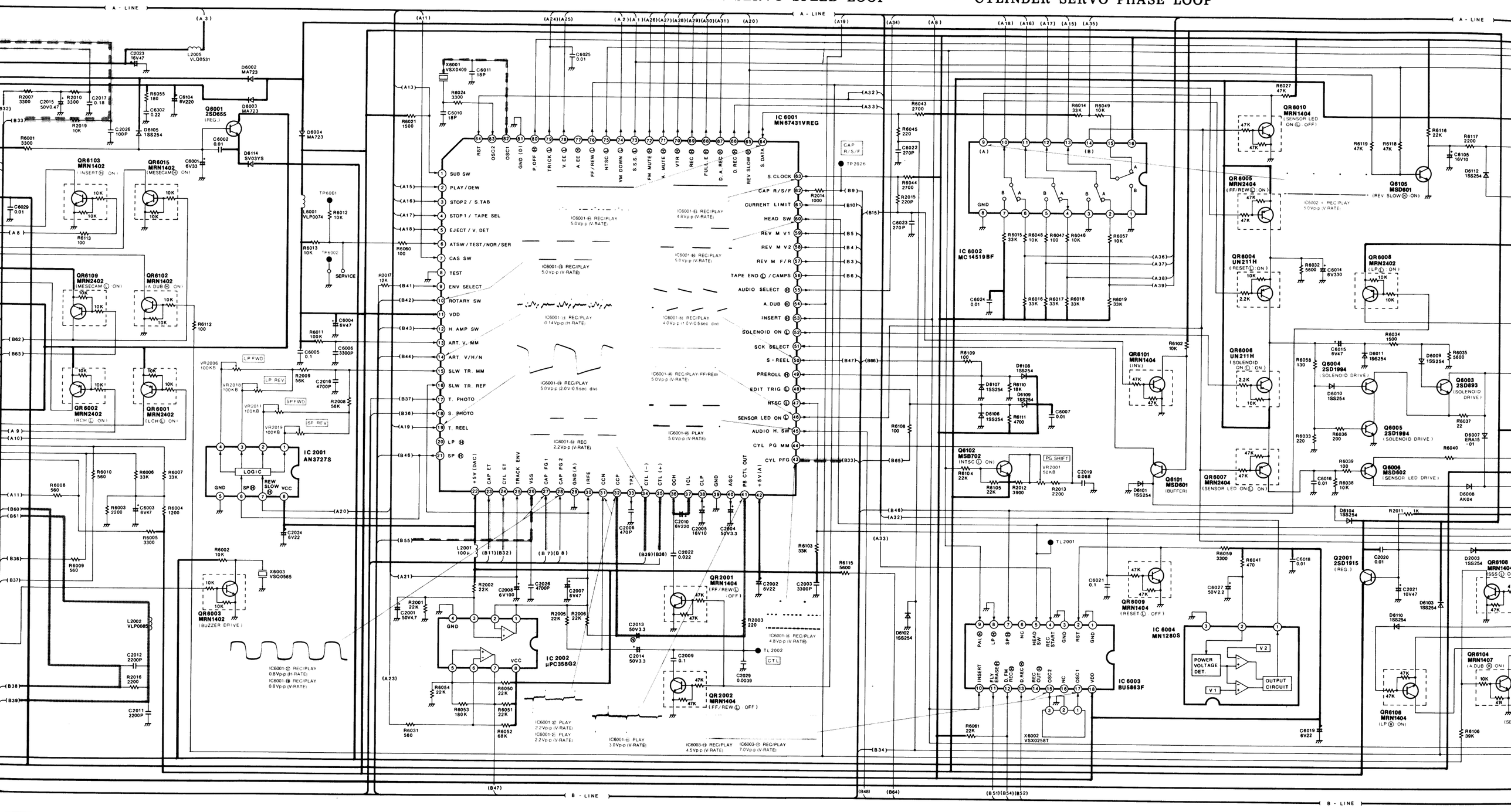

CYLINDER SERVO PHASE LOOP

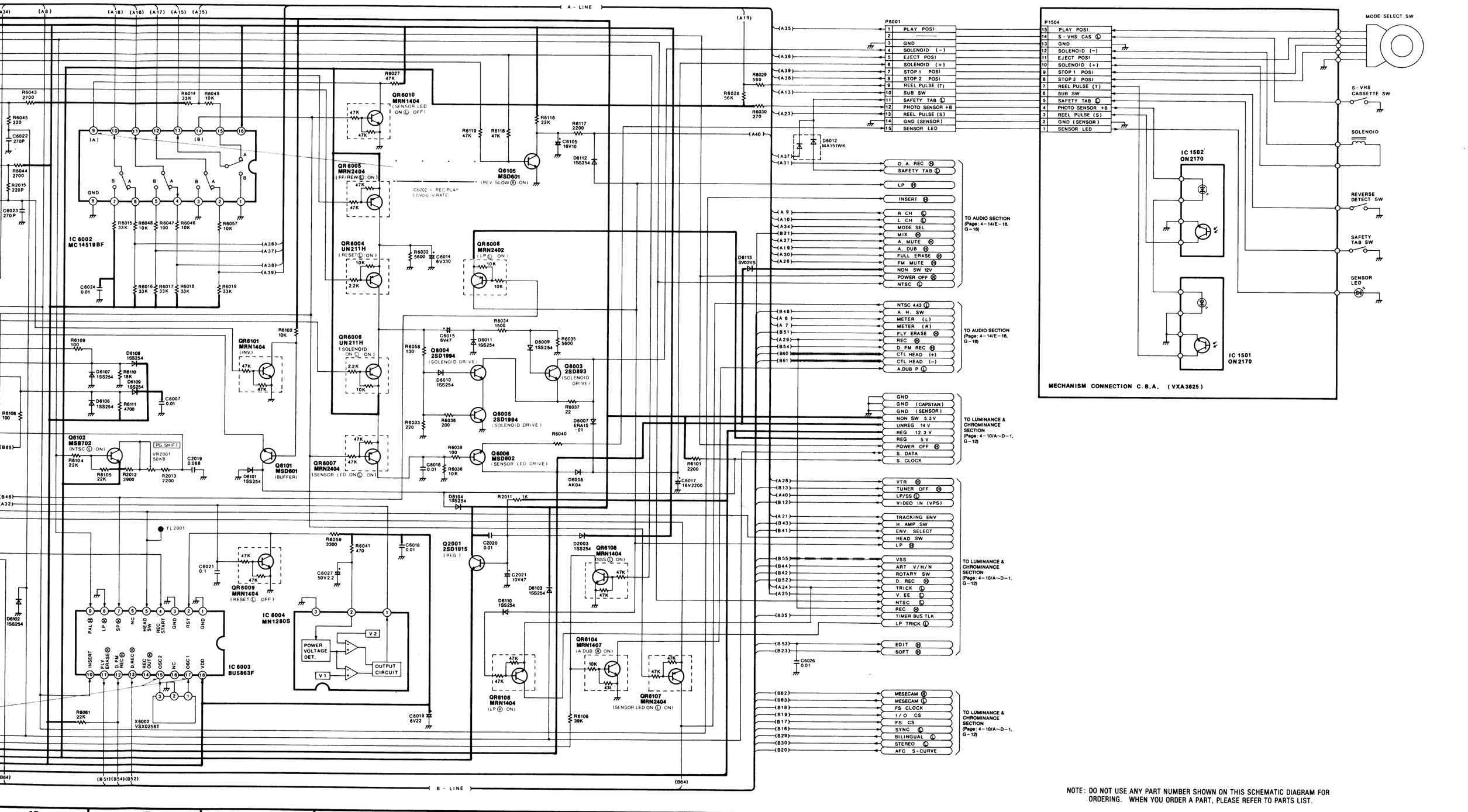

NOTE: DO NOT USE ANY PART NUMBER SHOWN ON THIS SCHEMATIC DIAGRAM FOR ORDERING. WHEN YOU ORDER A PART, PLEASE REFER TO PARTS LIST.

SYSTEM CONTROL & SERVO ICs DC VOLTAGE CHART (SP MODE)

REF. NO.	IC2001										IC2002									
MODE	1	2	3	4	5	6	7	8			1	2	3	4	5	6	7	8		
STOP 1	2.6	5.0	0	0	0	5.7	0	5.1			2.5	2.5	2.5	0	2.4	4.6	0.7	5.0		
PLAY	2.6	5.0	0	0	0	5.1	0	5.1			2.5	2.5	2.5	0	2.5	4.6	4.0	5.0		
REC	2.6	5.0	0	0	0	5.0	0	5.1			2.5	2.5	2.5	0	2.5	4.6	3.9	5.0		
F.F.	2.6	5.0	0	0	0	5.1	0	5.1			2.5	2.5	2.5	0	2.5	2.1	2.6	5.0		
REW	2.6	5.0	0	0	0	5.1	0	5.1			2.5	2.5	2.5	0	2.5	2.1	2.6	5.0		

REF. NO.	IC2901																			
MODE	1	2	3	4	5	6	7	8	9	10	11	12	13	14	15	16	17	18		
STOP 1	13.4	13.4	0.1	1.1	0	2.5	2.4	2.6	2.5	2.6	5.0	3.7	3.7	3.7	1.1	13.6	13.4	0.1		
PLAY	13.2	13.2	0.1	1.1	0	2.5	2.4	2.6	2.5	2.6	5.0	3.7	3.7	3.7	1.1	13.5	13.2	0.1		
REC	13.2	13.2	0.1	1.1	0	2.5	2.4	2.6	2.5	2.6	4.9	3.7	3.6	3.6	1.1	13.5	13.2	0.1		
F.F.	13.6	13.6	0	0.1	0	2.5	4.3	2.6	2.4	1.3	5.0	4.2	4.2	3.8	5.0	13.6	13.6	0		
REW	13.6	13.6	0	0.1	0	2.5	4.3	2.6	2.4	1.2	5.0	4.2	4.2	3.8	5.0	13.6	13.6	0		

REF. NO.	IC6001																			
MODE	1	2	3	4	5	6	7	8	9	10	11	12	13	14	15	16	17	18	19	20
STOP 1	0	0	0.3	0.3	5.1	0	2.0	0	0	3.1	5.1	0	0	0	0	2.5	3.3	3.3	0.3	0
PLAY	0	0	0.3	0.3	5.1	5.0	2.0	0	4.0	3.1	5.1	0	0	0	0	2.5	3.3	3.3	4.6	0
REC	0	0	0.3	0.3	5.1	5.0	2.0	0	4.6	3.1	5.1	0	0	0	0	2.5	3.3	3.3	4.6	0
F.F.	0	0.5	0.5	0	5.1	5.1	2.0	0	0	5.1	5.1	0	0	0	0	2.5	3.3	3.3	2.2	0
REW	0	0.5	0.5	0	5.1	5.1	2.0	0	0	5.1	5.1	0	0	0	0	2.5	3.3	3.3	2.2	0

REF. NO.	IC6001																			
MODE	21	22	23	24	25	26	27	28	29	30	31	32	33	34	35	36	37	38	39	40
STOP 1	5.1	5.1	0.2	2.5	2.5	2.5	2.5	2.5	0	2.5	2.4	2.6	5.0	0	0	0	2.5	0	0	2.5
PLAY	5.1	5.1	2.6	2.4	0	2.5	2.5	2.5	0	2.5	2.4	2.6	5.0	0	0	0	2.5	0	0	2.8
REC	0	5.1	0	2.4	0	2.5	2.5	2.5	0	2.5	2.4	2.6	0	2.4	2.8	0	2.5	0	0	2.5
F.F.	5.1	5.1	2.6	4.3	0	2.5	2.5	2.5	0	2.5	2.4	2.6	5.0	0	0	0	2.5	0	0	2.9
REW	5.1	5.1	2.6	4.3	0.7	2.5	2.5	2.5	0	2.5	2.4	2.6	5.0	0	0	0	2.5	2.5	0	2.9

REF. NO.	IC6001																			
MODE	41	42	43	44	45	46	47	48	49	50	51	52	53	54	55	56	57	58	59	60
STOP 1	2.6	5.0	1.1	3.0	0	4.8	5.0	5.1	0	0.7	4.0	5.1	0	0	5.1	5.1	0	0	0	3.1
PLAY	2.6	5.0	1.1	3.0	2.8	4.8	5.0	5.1	0	4.0	4.0	5.1	0	0	5.1	5.1	0	0	0	3.1
REC	2.5	5.0	1.1	2.9	0	4.7	5.0	5.0	0	3.9	4.0	5.1	0	0	5.0	5.0	0	0	0	0
F.F.	2.5	5.0	5.0	0.1	0	4.7	5.0	5.1	0	2.5	4.0	5.1	0	0	5.1	5.1	0	0	0	0
REW	2.5	5.0	5.0	0.1	0	4.7	5.0	5.1	0	2.5	0	5.1	0	0	5.1	5.1	0	0	0	0

REF. NO.	IC6001																			
MODE	61	62	63	64	65	66	67	68	69	70	71	72	73	74	75	76	77	78	79	80
STOP 1	5.0	2.1	4.2	4.2	0	0	0	0	0	5.0	0	0	0	5.0	5.0	5.0	5.1	0.1	5.1	0
PLAY	5.0	0	4.3	4.2	0	0	0	0	0	5.0	0	0	5.0	0	5.0	5.0	0	5.1	5.1	0
REC	5.0	0	4.3	4.2	0	5.0	5.0	5.0	5.0	5.0	0	0	5.0	0	5.0	5.0	5.0	0.1	5.0	0
F.F.	5.0	0	4.2	4.2	0	0	0	0	0	5.0	0	0	5.0	5.0	5.0	0	0	0	5.1	0
REW	5.0	5.1	4.2	4.2	0	0	0	0	0	5.0	0	0	5.0	5.0	5.0	0	5.1	0.1	5.0	0

REF. NO.	IC6001																			
MODE	81	82	83	84																
STOP 1	0	–	–	4.3																
PLAY	0	–	–	4.3																
REC	0	–	–	4.3																
F.F.	0	–	–	4.9																
REW	0	–	–	4.9																

REF. NO.	IC6002																			
MODE	1	2	3	4	5	6	7	8	9	10	11	12	13	14	15	16				
STOP 1	0	5.0	0	5.0	0.5	5.0	5.1	0	0.3	5.1	0.3	0.3	0	4.8	0	5.1				
PLAY	0	5.0	0	5.0	0.5	5.0	5.1	0	0.3	5.1	0.3	0.3	0	5.0	0	5.1				
REC	0	5.0	0	5.0	0.5	5.0	5.0	0	0.3	5.1	0.3	0.3	0	5.0	0	5.1				
F.F.	0	0	0	5.0	0.5	5.0	5.1	0	0.5	5.1	0.5	0	0.5	4.5	5.0	5.1				
REW	0	0	0	5.0	0.5	5.0	5.1	0	0	5.1	0.5	0	0.5	4.5	5.0	5.1				

REF. NO.	IC6003																			
MODE	1	2	3	4	5	6	7	8	9	10	11	12	13	14	15	16	17	18		
STOP 1	0	0	0	0	3.1	0	5.1	0	5.0	0	0	0.1	0.1	5.0	0	0	0.7	5.1		
PLAY	0	0.1	0	0	3.1	0	5.1	0	5.0	0	0	0.1	0.1	5.0	2.1	0	0.8	5.1		
REC	0	0	0	5.0	3.1	0	5.1	0	5.0	0	0	3.8	5.0	0	0	0	1.0	5.1		
F.F.	0	0	0	0	0	0	5.1	0	5.0	0	0	0.1	0.1	5.0	2.1	0	0.8	5.1		
REW	0	0	0	0	0	0	5.1	0	5.0	0	0	0.1	0.1	5.0	2.1	0	0.8	5.1		

REF. NO.	IC6004																			
MODE	1	2	3																	
STOP 1	4.3	4.9	0																	
PLAY	4.3	4.9	0																	
REC	4.3	4.9	0																	
F.F.	4.9	5.0	0																	
REW	4.9	5.0	0																	

SYSTEM CONTROL & SERVO TRANSISTORs DC VOLTAGE CHART (SP MODE)

REF. NO.	Q2001			Q6001			Q6003			Q6004			Q6005			Q6006		
MODE	E	C	B	E	C	B	E	C	B	E	C	B	E	C	B	E	C	B
STOP 1	5.1	5.4	5.8	5.1	11.4	5.7	13.7	13.7	5.0	0.8	13.7	0.9	0	0.8	0	0.4	13.7	0.3
PLAY	5.1	5.4	5.8	5.1	11.3	5.7	13.6	13.6	4.9	1.4	13.6	1.4	0	1.1	0	0.4	13.6	0.3
REC	5.1	5.4	5.8	5.1	11.3	5.7	13.5	13.5	4.8	0.9	13.5	1.0	0	0.8	0	0.4	13.5	0.3
F.F.	5.1	5.4	5.8	5.1	11.3	5.7	13.6	13.6	5.0	1.4	13.6	1.5	0	1.4	0	0.6	13.6	0.5
REW	5.1	5.4	5.8	5.1	11.3	5.7	13.6	13.6	5.0	1.4	13.6	1.4	0	1.3	0	0.6	13.6	0.5

REF. NO.	Q6101			Q6102			Q6105		
MODE	E	C	B	E	C	B	E	C	B
STOP 1	4.0	5.2	0.4	5.0	4.8	5.0	0	5.0	0
PLAY	4.0	5.2	0.4	5.1	4.8	5.0	0	0	0.6
REC	4.0	5.2	0.4	5.1	4.7	5.0	0	0	0.6
F.F.	4.0	5.2	0.4	5.1	4.3	5.0	0	0	0.6
REW	4.0	5.2	0.4	5.1	4.3	5.0	0	0	0.6

REF. NO.	QR2001			QR2002			QR6001			QR6002			QR6003			QR6004		
MODE	E	C	B	E	C	B	E	C	B	E	C	B	E	C	B	E	C	B
STOP 1	0	0	5.0	0	0	5.0	5.1	5.1	0	5.1	5.1	0	0	0	4.9	1.4	0	4.3
PLAY	0	0	5.0	0	0	5.0	5.1	5.1	0	5.1	5.1	0	0	0	4.9	1.5	0	4.3
REC	0	0	5.0	0	0	5.0	5.1	5.1	0	5.1	5.1	0	0	0	4.9	1.5	0	4.3
F.F.	0	0	0	0	0.8	0	5.1	5.1	0	5.1	5.1	0	0	0	4.9	5.0	0	4.9
REW	0	0	0	0	0.8	0	5.1	5.1	0	5.1	5.1	0	0	0	4.9	5.0	0	4.9

REF. NO.	QR6005			QR6006			QR6007			QR6008			QR6009			QR6010		
MODE	E	C	B	E	C	B	E	C	B	E	C	B	E	C	B	E	C	B
STOP 1	5.1	1.4	5.0	5.1	0	5.1	5.1	0.3	4.8	5.0	0	5.1	0	0.1	4.3	0	0.3	4.7
PLAY	5.1	1.5	5.0	5.1	0	5.1	5.1	0.3	4.8	5.0	0	5.1	0	0.1	4.3	0	0.3	4.8
REC	5.1	1.5	5.0	5.1	0	5.0	5.1	0.3	4.8	5.0	0	5.1	0	0.1	4.3	0	0.3	4.7
F.F.	5.1	5.0	0	5.1	0	5.1	5.1	0.6	4.6	5.0	0	5.1	0	0.1	4.9	0	0.5	4.7
REW	5.1	5.0	0	5.1	0	5.1	5.1	0.5	4.6	5.0	0	5.1	0	0.1	4.9	0	0.5	4.7

REF. NO.	QR6101			QR6102			QR6103			QR6104			QR6105			QR6106		
MODE	E	C	B	E	C	B	E	C	B	E	C	B	E	C	B	E	C	B
STOP 1	0	0.4	4.3	0	3.7	0	0	3.6	0	0	4.5	0	0	3.7	0.2	5.0	4.7	5.0
PLAY	0	0.4	4.3	0	3.6	0	0	3.6	0	0	4.4	0	0	3.6	0.2	5.1	4.7	5.0
REC	0	0.4	4.3	0	3.7	0	0	3.8	0	0	4.5	0	0	3.8	0.2	5.1	4.7	5.0
F.F.	0	0.4	4.3	0	3.8	0	0	3.9	0	0	4.6	0	0	4.0	0.2	5.1	4.7	5.0
REW	0	0.4	4.3	0	3.9	0	0	3.9	0	0	4.6	0	0	3.9	0.2	5.1	4.7	5.0

REF. NO.	QR6107			QR6108			QR6109		
MODE	E	C	B	E	C	B	E	C	B
STOP 1	5.0	5.0	4.7	0	0	0	5.0	0.2	5.0
PLAY	5.0	5.0	4.7	0	0	5.0	5.1	0.2	5.0
REC	5.0	5.0	4.7	0	0	5.0	5.0	0.2	5.0
F.F.	5.0	5.0	4.7	0	0	5.0	5.0	0.2	5.0
REW	5.0	5.0	4.7	0	0	5.0	5.1	0.2	5.0

4-2. POWER SCHEMATIC DIAGRAM

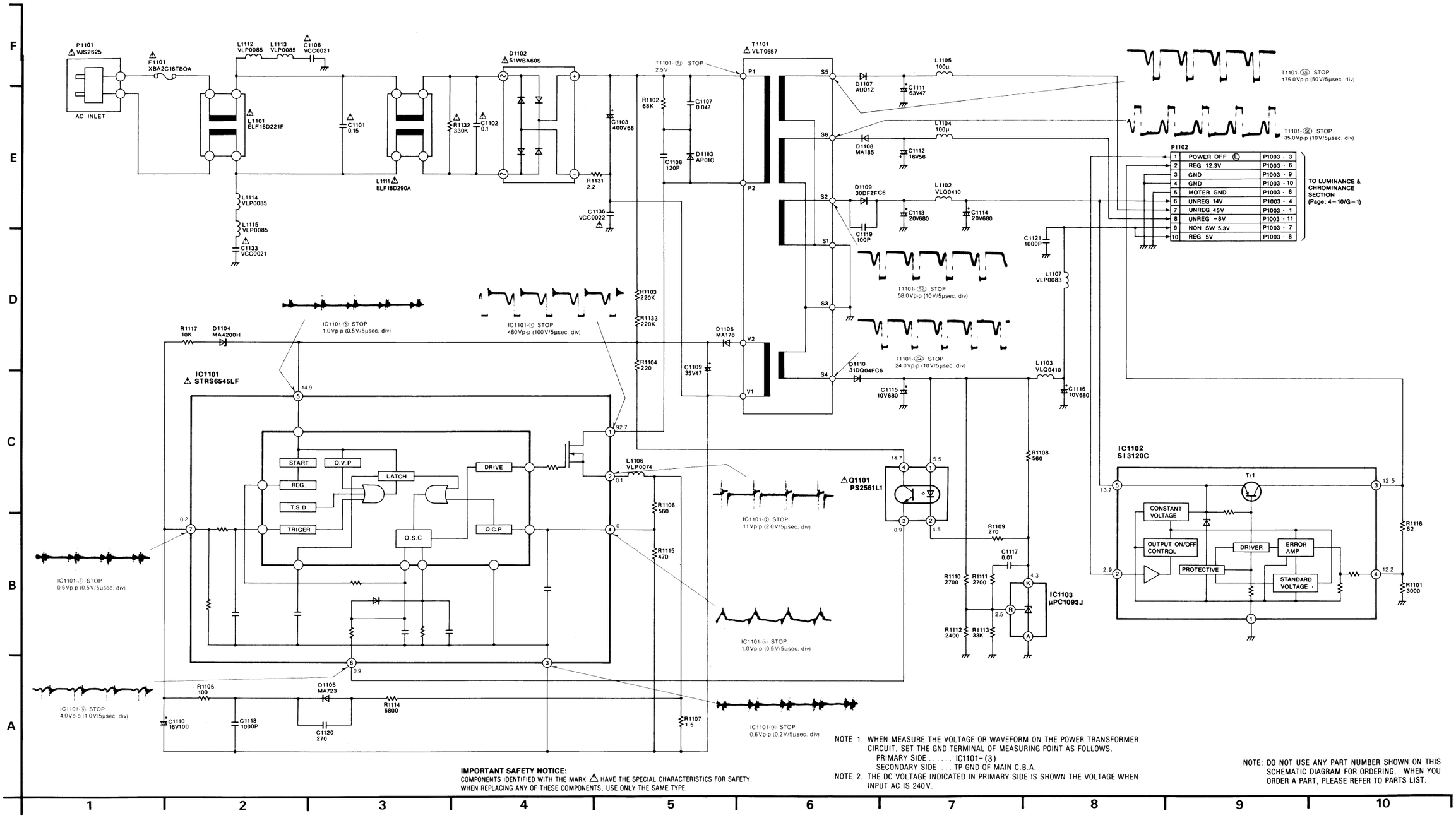

IMPORTANT SAFETY NOTICE:
COMPONENTS IDENTIFIED WITH THE MARK ⚠ HAVE THE SPECIAL CHARACTERISTICS FOR SAFETY. WHEN REPLACING ANY OF THESE COMPONENTS, USE ONLY THE SAME TYPE.

NOTE 1. WHEN MEASURE THE VOLTAGE OR WAVEFORM ON THE POWER TRANSFORMER CIRCUIT, SET THE GND TERMINAL OF MEASURING POINT AS FOLLOWS.
PRIMARY SIDE ..... IC1101-(3)
SECONDARY SIDE ... TP GND OF MAIN C.B.A.

NOTE 2. THE DC VOLTAGE INDICATED IN PRIMARY SIDE IS SHOWN THE VOLTAGE WHEN INPUT AC IS 240V.

NOTE: DO NOT USE ANY PART NUMBER SHOWN ON THIS SCHEMATIC DIAGRAM FOR ORDERING. WHEN YOU ORDER A PART, PLEASE REFER TO PARTS LIST.

4-3. LUMINANCE & CHROMINANCE SECTION IN MAIN SCHEMATIC DIAGRAM

VIDEO MAIN SIGNAL PATH IN REC
VIDEO MAIN SIGNAL PATH IN PLAY

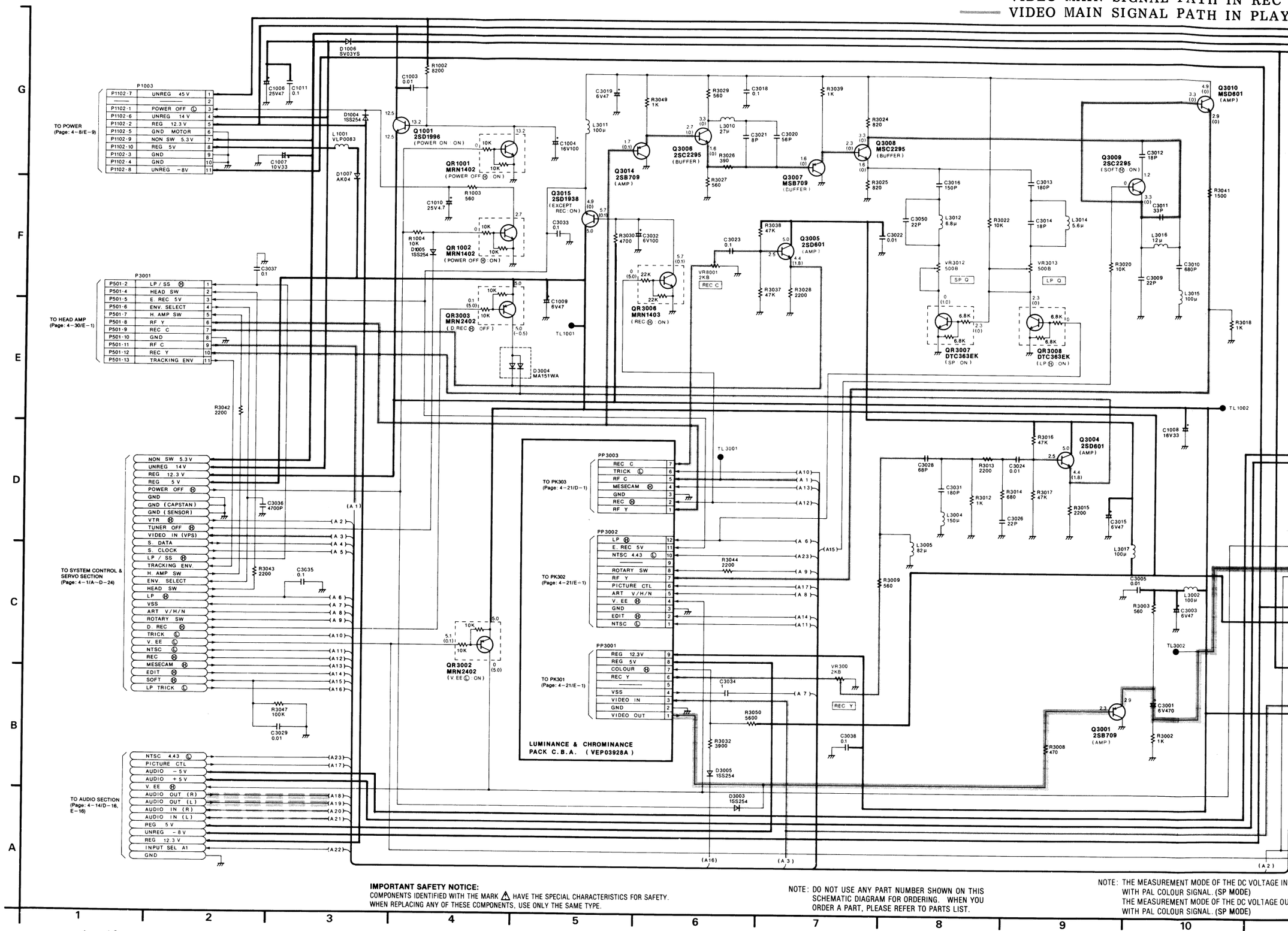

IMPORTANT SAFETY NOTICE:
COMPONENTS IDENTIFIED WITH THE MARK ⚠ HAVE THE SPECIAL CHARACTERISTICS FOR SAFETY. WHEN REPLACING ANY OF THESE COMPONENTS, USE ONLY THE SAME TYPE.

NOTE: DO NOT USE ANY PART NUMBER SHOWN ON THIS SCHEMATIC DIAGRAM FOR ORDERING. WHEN YOU ORDER A PART, PLEASE REFER TO PARTS LIST.

NOTE: THE MEASUREMENT MODE OF THE DC VOLTAGE IN
WITH PAL COLOUR SIGNAL. (SP MODE)
THE MEASUREMENT MODE OF THE DC VOLTAGE OU
WITH PAL COLOUR SIGNAL. (SP MODE)

DEO MAIN SIGNAL PATH IN REC MODE
DEO MAIN SIGNAL PATH IN PLAYBACK MODE

AUDIO MAIN SIGNAL PATH IN REC MODE
AUDIO MAIN SIGNAL PATH IN PLAYBACK MODE

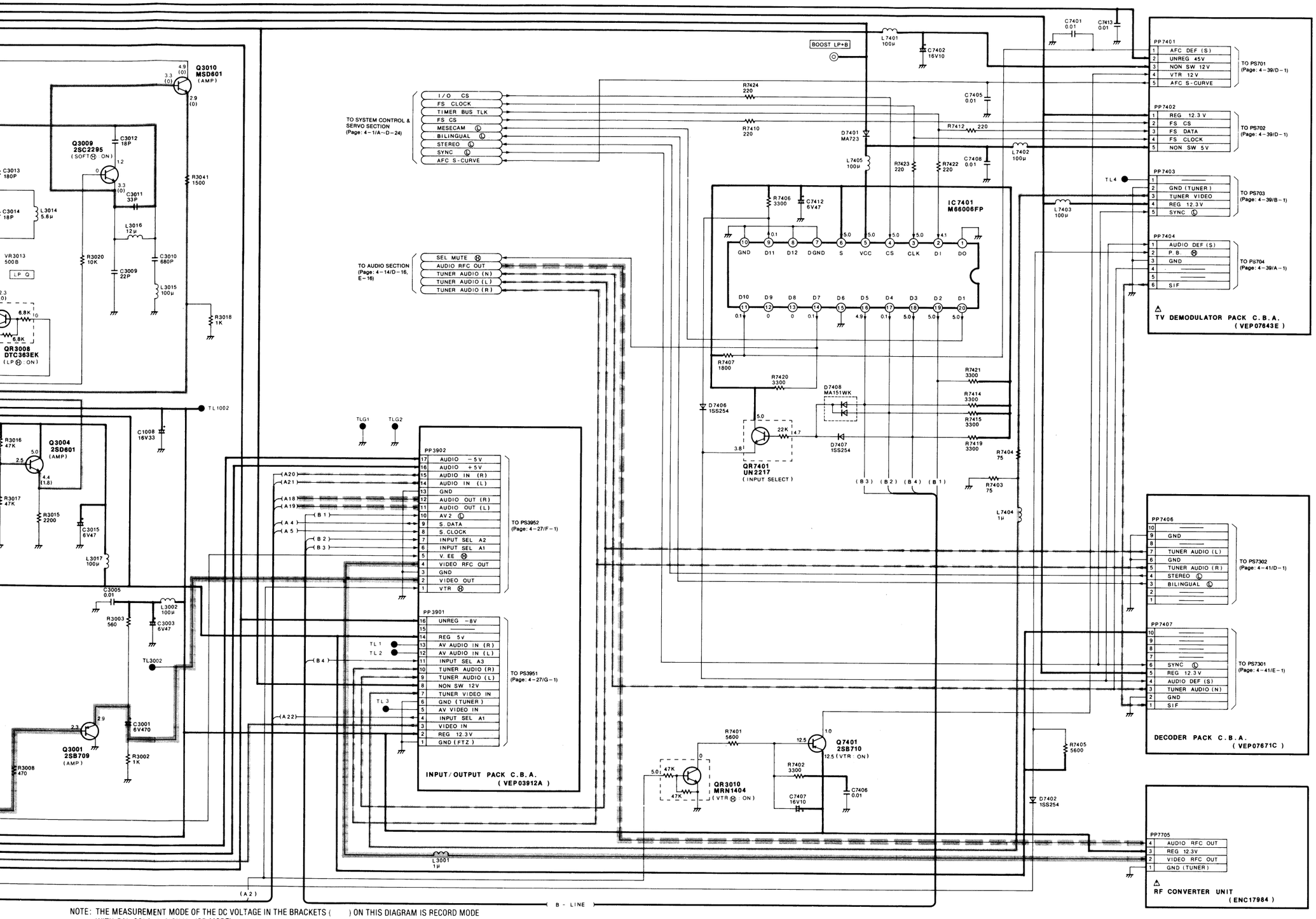

NOTE: THE MEASUREMENT MODE OF THE DC VOLTAGE IN THE BRACKETS ( ) ON THIS DIAGRAM IS RECORD MODE WITH PAL COLOUR SIGNAL. (SP MODE)
THE MEASUREMENT MODE OF THE DC VOLTAGE OUT OF THE BRACKETS ON THIS DIAGRAM IS PLAYBACK MODE WITH PAL COLOUR SIGNAL. (SP MODE)

4-4. AUDIO SECTION IN MAIN SCHEMATIC DIAGRAM

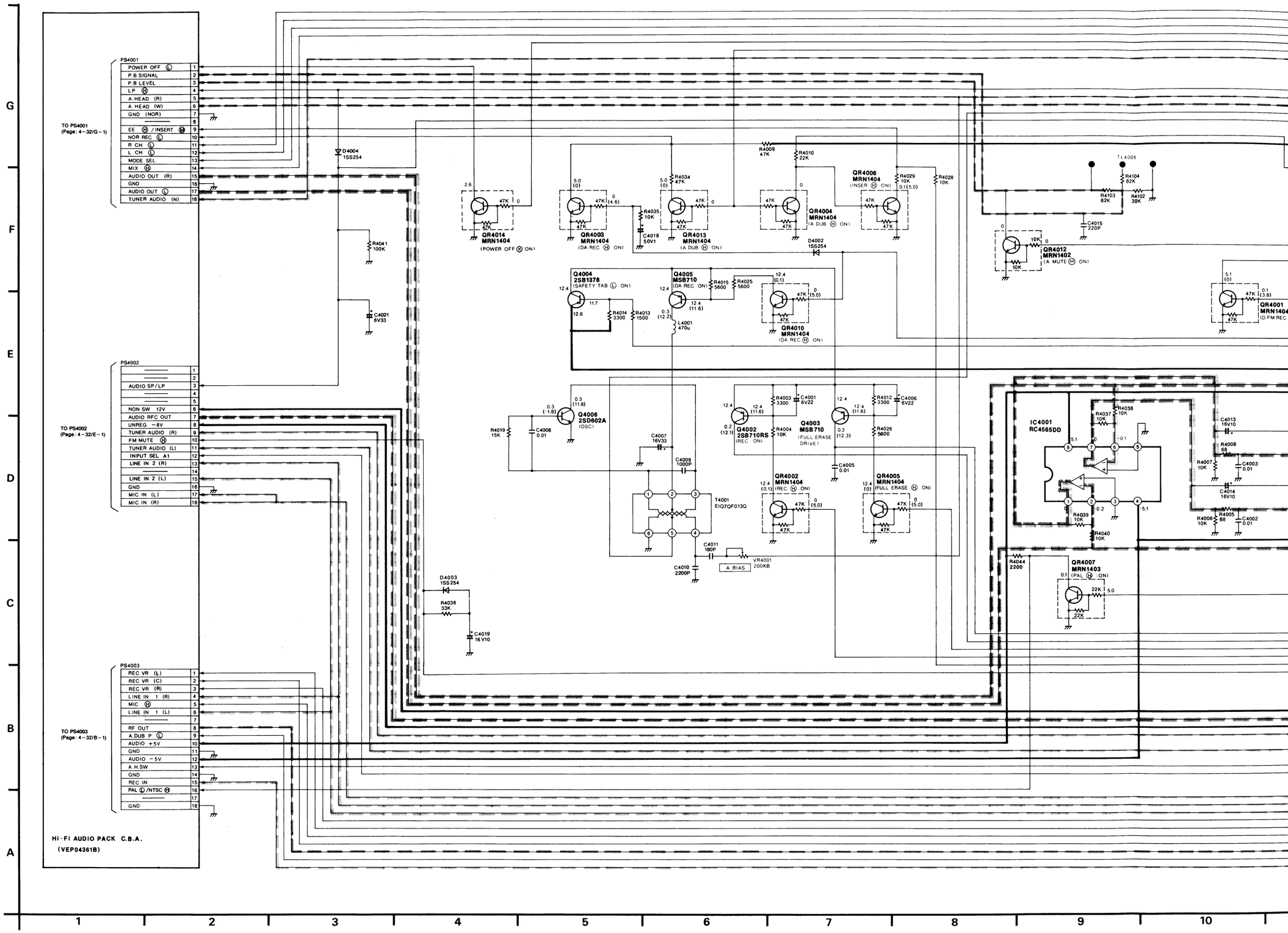

MAIN SIGNAL PATH IN REC MODE

MAIN SIGNAL PATH IN PLAYBACK MODE

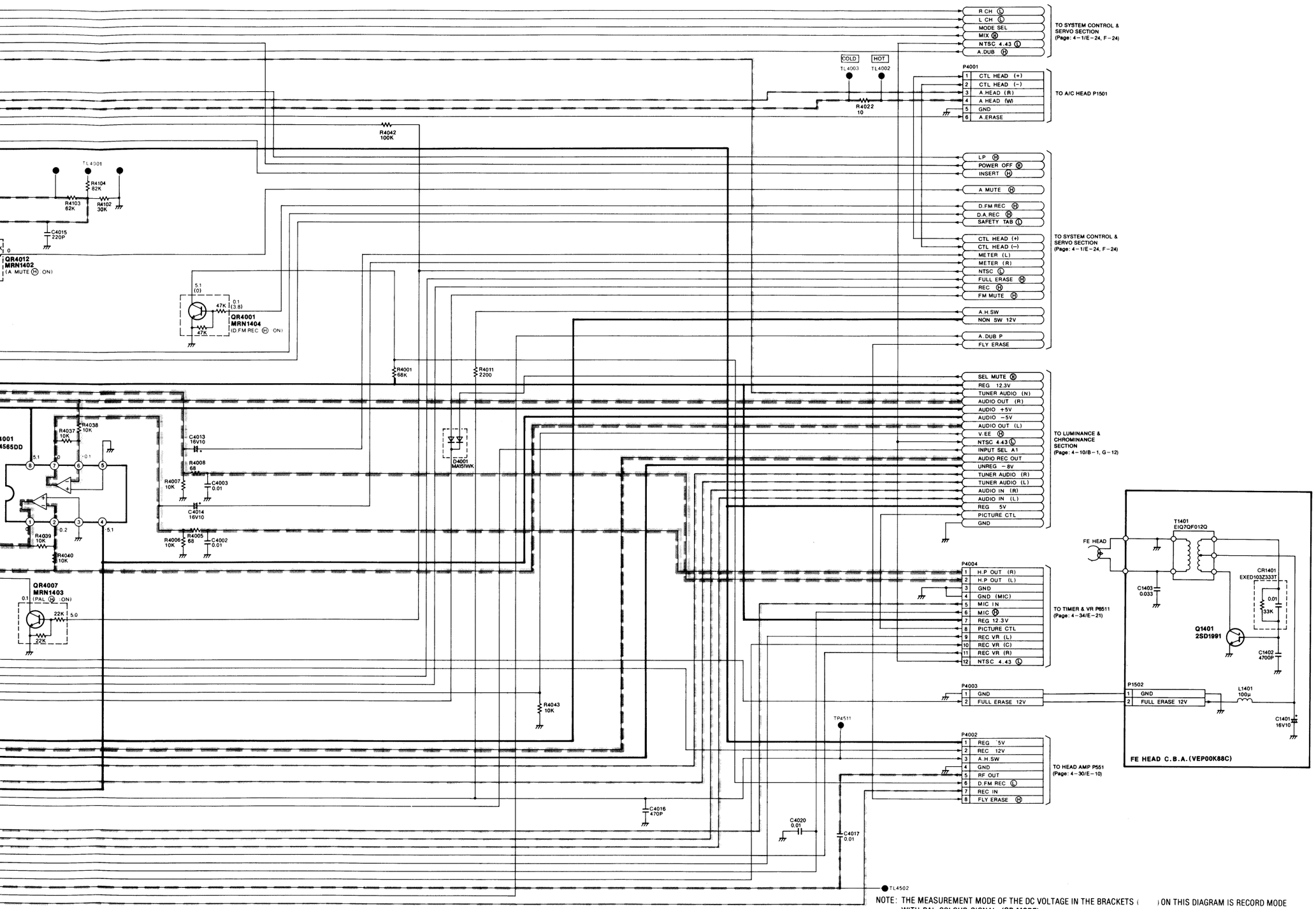

NOTE: DO NOT USE ANY PART NUMBER SHOWN ON THIS SCHEMATIC DIAGRAM FOR ORDERING. WHEN YOU ORDER A PART, PLEASE REFER TO PARTS LIST.

NOTE: THE MEASUREMENT MODE OF THE DC VOLTAGE IN THE BRACKETS ( ) ON THIS DIAGRAM IS RECORD MODE WITH PAL COLOUR SIGNAL. (SP MODE)
THE MEASUREMENT MODE OF THE DC VOLTAGE OUT OF THE BRACKETS ON THIS DIAGRAM IS PLAYBACK MODE WITH PAL COLOUR SIGNAL. (SP MODE)

• LINE IN SIGNAL LEVEL... −10dB 1kHz

9 | 10 | 11 | 12 | 13 | 14 | 15 | 16 | 17 | 18

4-5. SUB SERVO PACK SCHEMATIC DIAGRAM

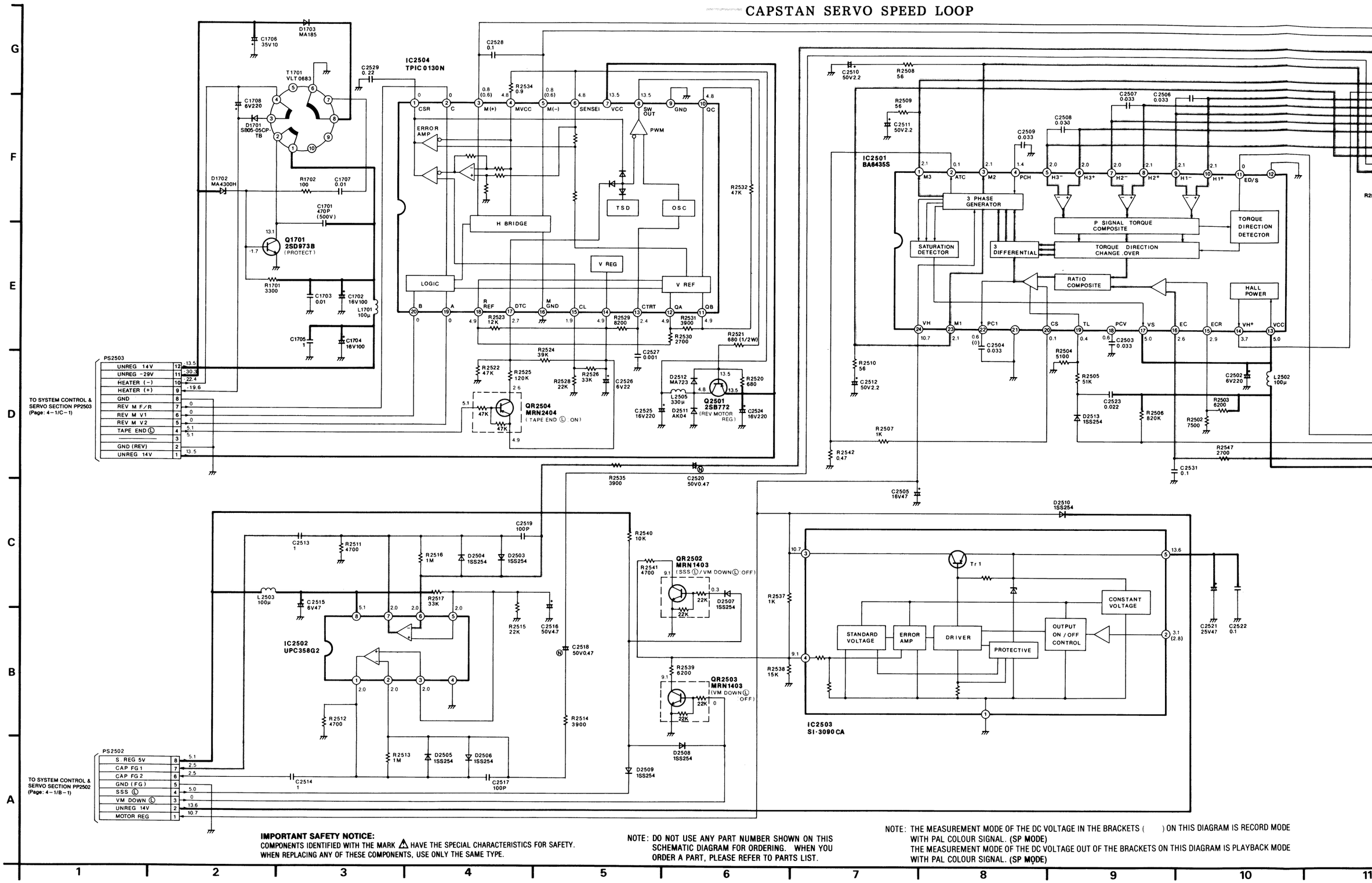

IMPORTANT SAFETY NOTICE:
COMPONENTS IDENTIFIED WITH THE MARK ⚠ HAVE THE SPECIAL CHARACTERISTICS FOR SAFETY. WHEN REPLACING ANY OF THESE COMPONENTS, USE ONLY THE SAME TYPE.

NOTE: DO NOT USE ANY PART NUMBER SHOWN ON THIS SCHEMATIC DIAGRAM FOR ORDERING. WHEN YOU ORDER A PART, PLEASE REFER TO PARTS LIST.

NOTE: THE MEASUREMENT MODE OF THE DC VOLTAGE IN THE BRACKETS ( ) ON THIS DIAGRAM IS RECORD MODE WITH PAL COLOUR SIGNAL. (SP MODE)
THE MEASUREMENT MODE OF THE DC VOLTAGE OUT OF THE BRACKETS ON THIS DIAGRAM IS PLAYBACK MODE WITH PAL COLOUR SIGNAL. (SP MODE)

CAPSTAN SERVO SPEED LOOP

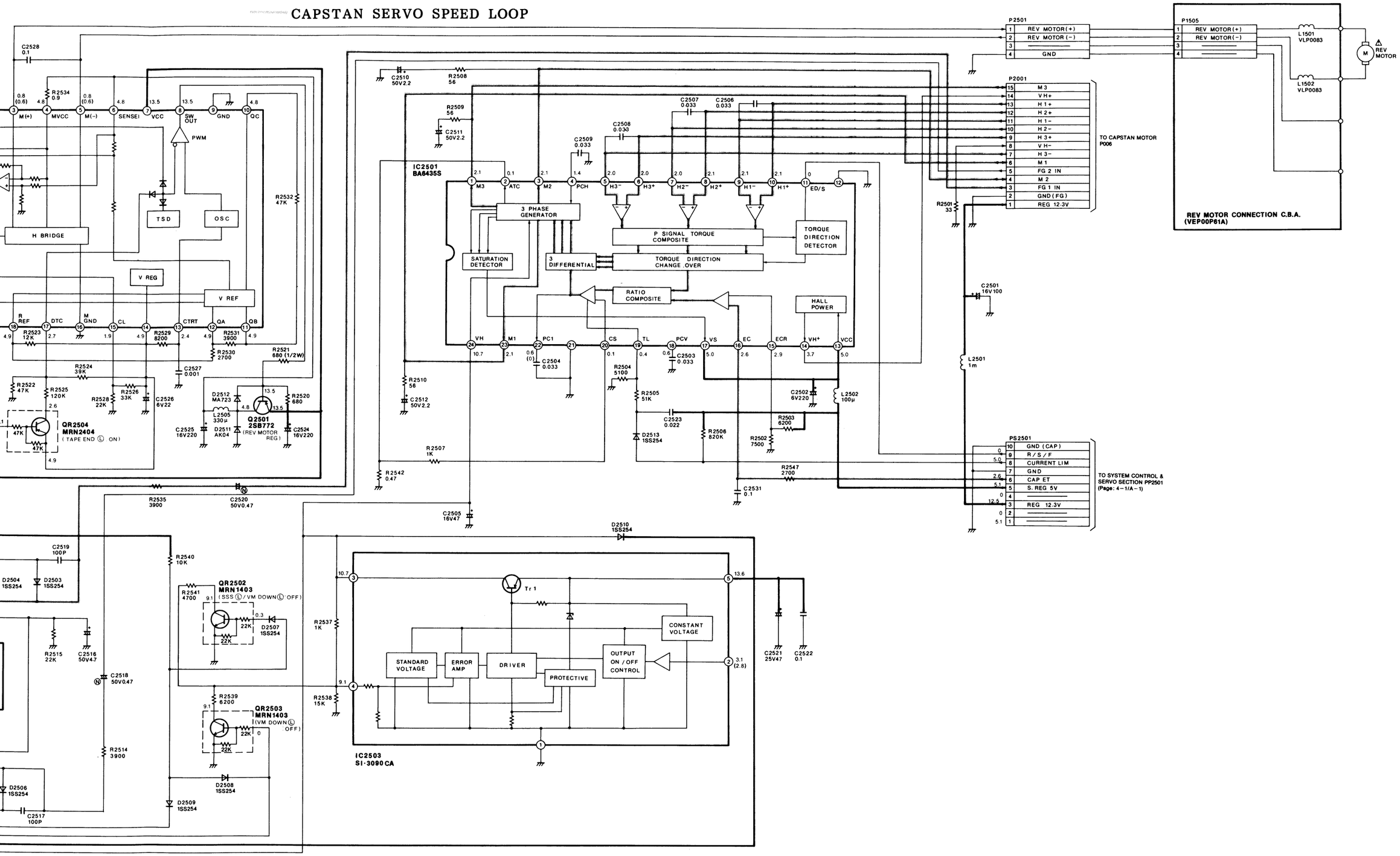

L CHARACTERISTICS FOR SAFETY.
SAME TYPE.

NOTE: DO NOT USE ANY PART NUMBER SHOWN ON THIS SCHEMATIC DIAGRAM FOR ORDERING. WHEN YOU ORDER A PART, PLEASE REFER TO PARTS LIST.

NOTE: THE MEASUREMENT MODE OF THE DC VOLTAGE IN THE BRACKETS ( ) ON THIS DIAGRAM IS RECORD MODE WITH PAL COLOUR SIGNAL. (SP MODE)
THE MEASUREMENT MODE OF THE DC VOLTAGE OUT OF THE BRACKETS ON THIS DIAGRAM IS PLAYBACK MODE WITH PAL COLOUR SIGNAL. (SP MODE)

4-6. LUMINANCE & CHROMINANCE PACK SCHEMATIC DIAGRAM

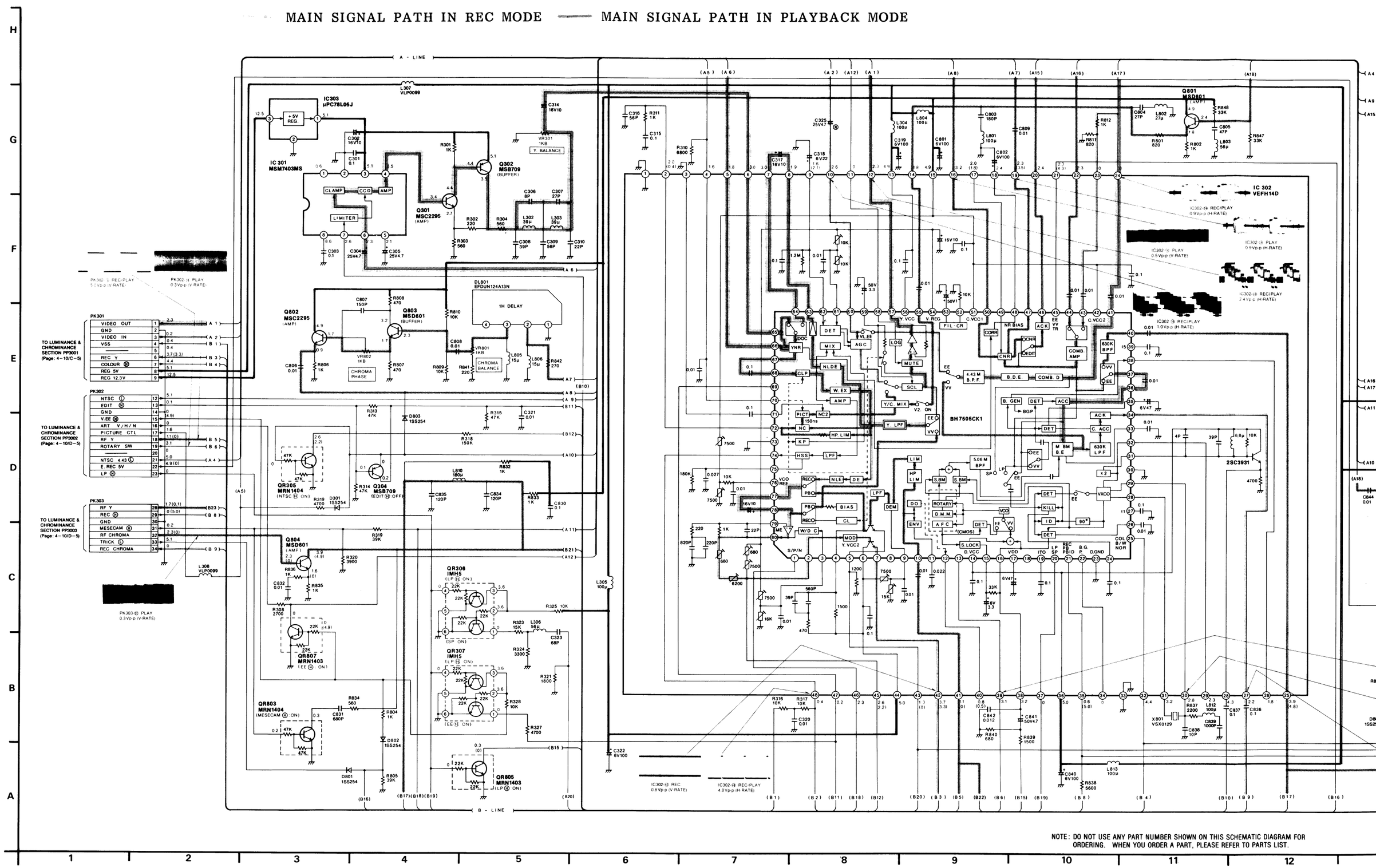

NOTE: DO NOT USE ANY PART NUMBER SHOWN ON THIS SCHEMATIC DIAGRAM FOR ORDERING. WHEN YOU ORDER A PART, PLEASE REFER TO PARTS LIST.

ATIC DIAGRAM

EC MODE —— MAIN SIGNAL PATH IN PLAYBACK MODE

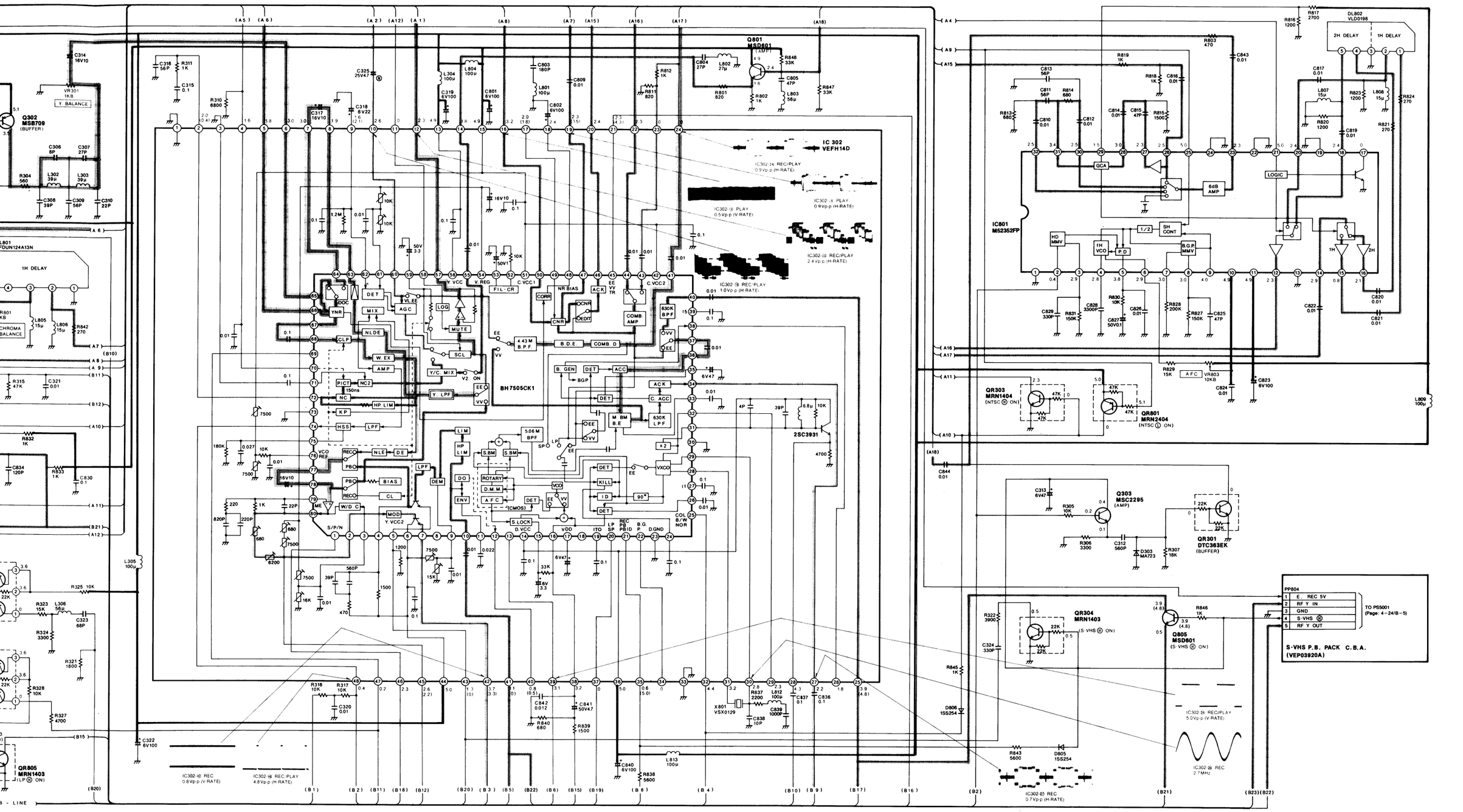

NOTE: DO NOT USE ANY PART NUMBER SHOWN ON THIS SCHEMATIC DIAGRAM FOR ORDERING. WHEN YOU ORDER A PART, PLEASE REFER TO PARTS LIST.

NOTE: THE MEASUREMENT MODE OF THE DC VOLTAGE IN THE BRACKETS ( ) ON THIS DIAGRAM IS RECORD MODE WITH PAL COLOUR SIGNAL. (SP MODE)
THE MEASUREMENT MODE OF THE DC VOLTAGE OUT OF THE BRACKETS ON THIS DIAGRAM IS PLAYBACK MODE WITH PAL COLOUR SIGNAL. (SP MODE)

4-7. S-VHS P.B. PACK SCHEMATIC DIAGRAM

MAIN SIGNAL PATH IN PLAYBACK MODE

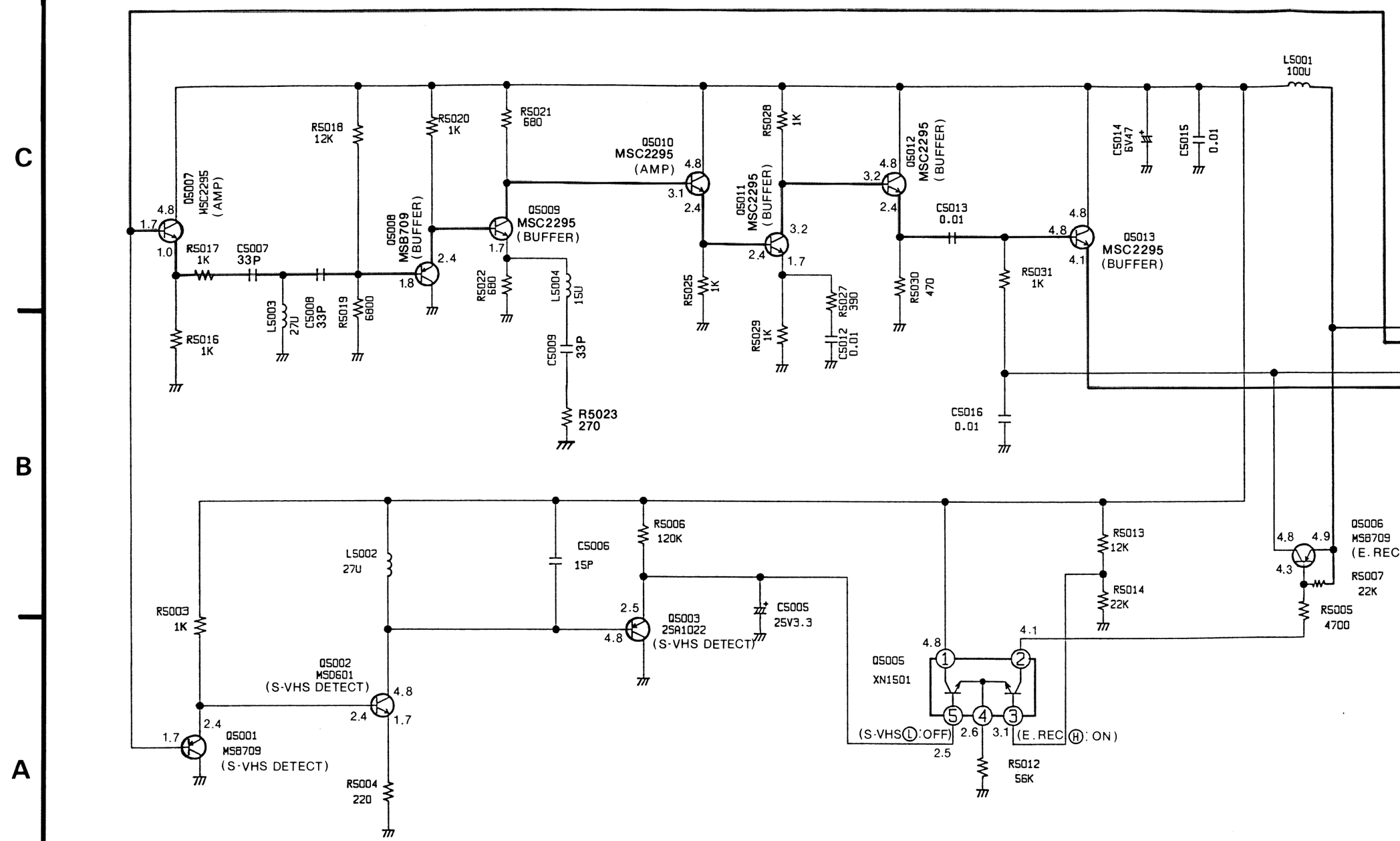

NOTE: DO NOT USE ANY PART NUMBER SHOWN ON THIS SCHEMATIC DIAGRAM FOR ORDERING. WHEN YOU ORDER A PART, PLEASE REFER TO PARTS LIST.

NOTE: THE MEASUREMENT MODE OF THE DC VOLTAGE OUT OF THE BRACKETS ON THIS DIA
WITH PAL COLOUR SIGNAL. (S-VHS: SP MODE)

TIC DIAGRAM

MAIN SIGNAL PATH IN PLAYBACK MODE

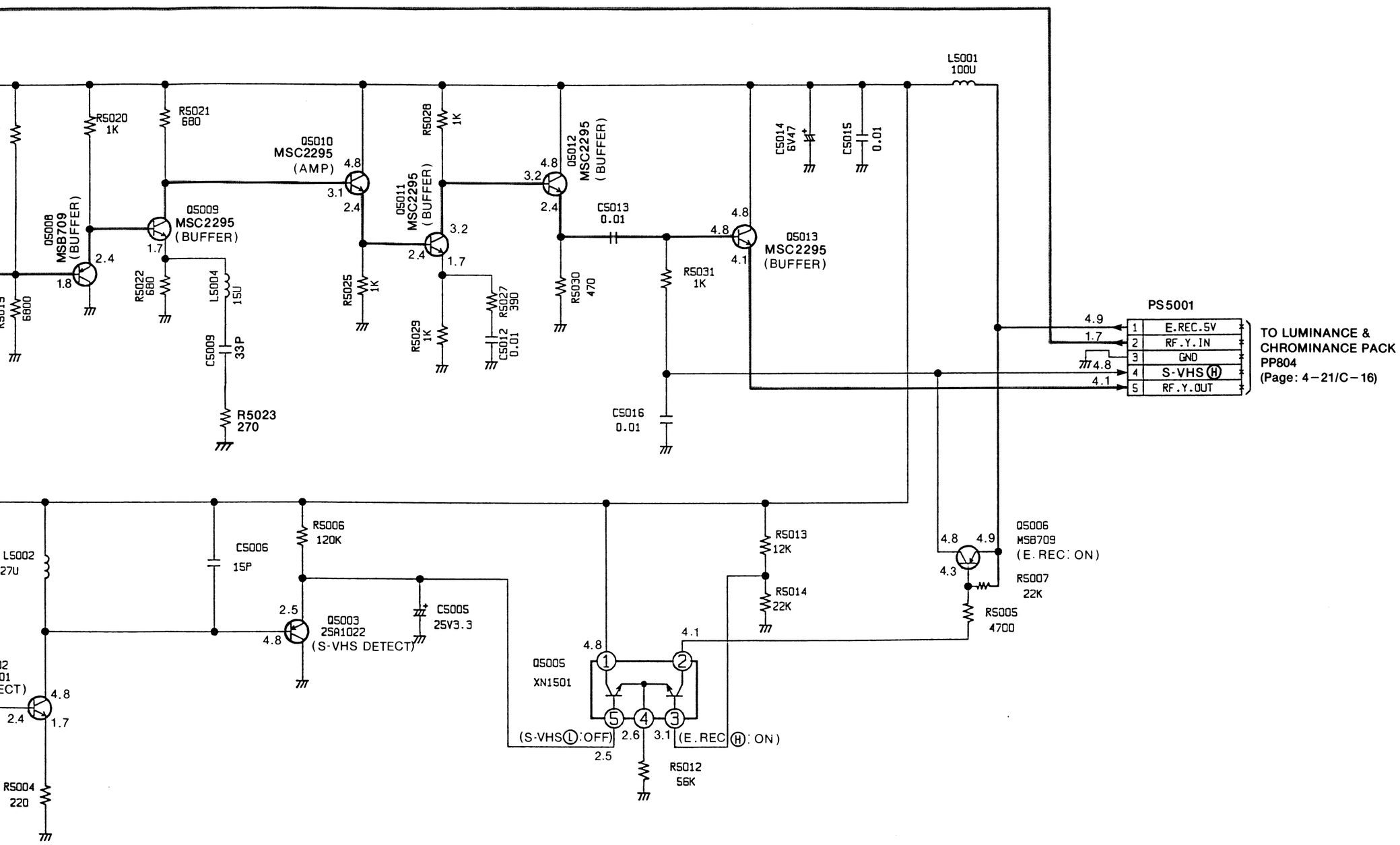

T NUMBER SHOWN ON THIS SCHEMATIC DIAGRAM FOR
U ORDER A PART, PLEASE REFER TO PARTS LIST.

NOTE: THE MEASUREMENT MODE OF THE DC VOLTAGE OUT OF THE BRACKETS ON THIS DIAGRAM IS PLAYBACK MODE WITH PAL COLOUR SIGNAL. (S-VHS: SP MODE)

2 3 4 5 6

4-8. INPUT/OUTPUT PACK SCHEMATIC DIAGRAM

VIDEO MAIN SIGNAL PATH IN REC MODE
VIDEO MAIN SIGNAL PATH IN PLAYBACK MODE
AUDIO MAIN SIGNAL PATH IN REC M
AUDIO MAIN SIGNAL PATH IN PLAYB

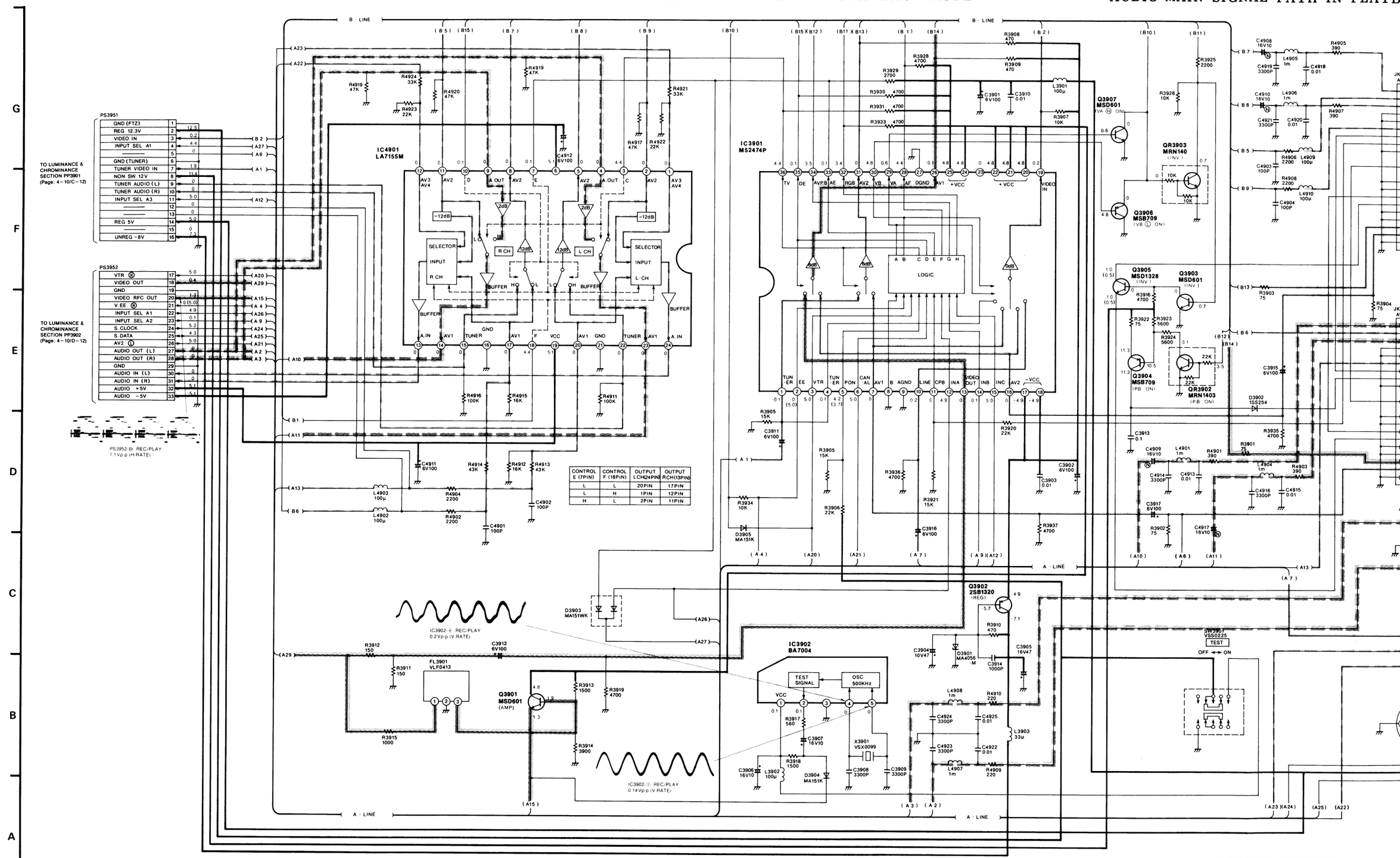

CONTROL E (7PIN)	CONTROL F (18PIN)	OUTPUT LCH(24PIN)	OUTPUT RCH(13PIN)
L	L	20PIN	17PIN
L	H	1PIN	12PIN
H	L	2PIN	11PIN

NOTE: DO NOT USE ANY PART NUMBER SHOWN ON THIS SCHEMATIC DIAGRAM FOR ORDERING. WHEN YOU ORDER A PART, PLEASE REFER TO PARTS LIST.

NOTE: THE MEASUREMENT MODE OF THE DC VOLTAGE IN THE BRACKETS ( ) ON THIS DIAGRAM IS RECORD MODE WITH PAL COLOUR SIGNAL. (SP MODE)
THE MEASUREMENT MODE OF THE DC VOLTAGE OUT OF THE BRACKETS ON THIS DIAGRAM IS PLAYBACK MODE WITH PAL COLOUR SIGNAL. (SP MODE)

AM

VIDEO MAIN SIGNAL PATH IN REC MODE
VIDEO MAIN SIGNAL PATH IN PLAYBACK MODE

AUDIO MAIN SIGNAL PATH IN REC MODE
AUDIO MAIN SIGNAL PATH IN PLAYBACK MODE

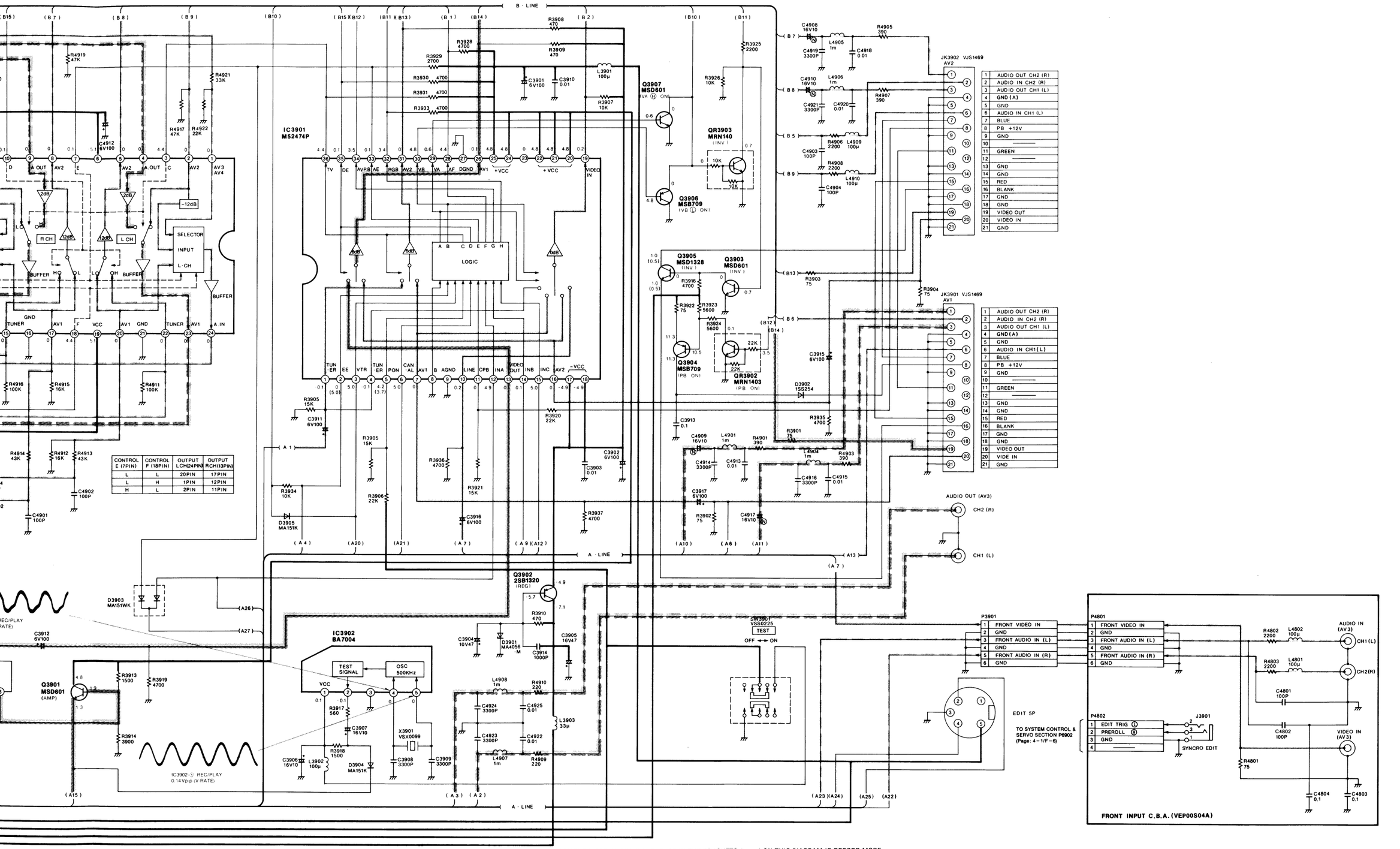

CONTROL E (7PIN)	CONTROL F (18PIN)	OUTPUT LCH(24PIN)	OUTPUT RCH(13PIN)
L	L	20PIN	17PIN
L	H	1PIN	12PIN
H	L	2PIN	11PIN

T USE ANY PART NUMBER SHOWN ON THIS SCHEMATIC DIAGRAM FOR
RING. WHEN YOU ORDER A PART, PLEASE REFER TO PARTS LIST.

NOTE: THE MEASUREMENT MODE OF THE DC VOLTAGE IN THE BRACKETS ( ) ON THIS DIAGRAM IS RECORD MODE WITH PAL COLOUR SIGNAL. (SP MODE)
THE MEASUREMENT MODE OF THE DC VOLTAGE OUT OF THE BRACKETS ON THIS DIAGRAM IS PLAYBACK MODE WITH PAL COLOUR SIGNAL. (SP MODE)

4-9. HEAD AMP SCHEMATIC DIAGRAM

VIDEO MAIN SIGNAL PATH IN REC MODE
VIDEO MAIN SIGNAL PATH IN PLAYBACK MODE
Hi-Fi AUDIO MAIN SIGNAL PATH IN REC MODE
Hi-Fi AUDIO MAIN SIGNAL PATH IN PLAYBACK MODE

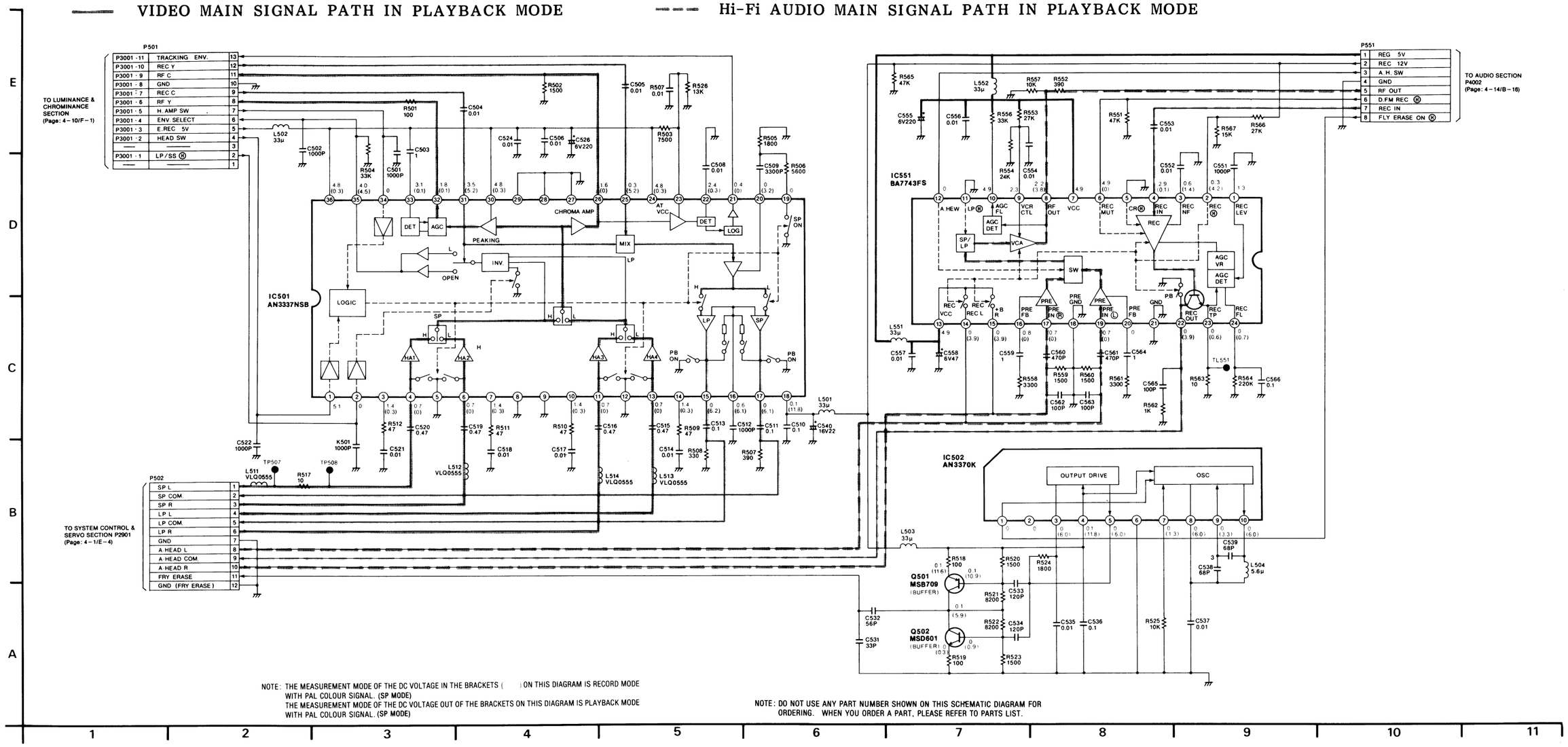

NOTE: THE MEASUREMENT MODE OF THE DC VOLTAGE IN THE BRACKETS ( ) ON THIS DIAGRAM IS RECORD MODE WITH PAL COLOUR SIGNAL. (SP MODE)
THE MEASUREMENT MODE OF THE DC VOLTAGE OUT OF THE BRACKETS ON THIS DIAGRAM IS PLAYBACK MODE WITH PAL COLOUR SIGNAL. (SP MODE)

NOTE: DO NOT USE ANY PART NUMBER SHOWN ON THIS SCHEMATIC DIAGRAM FOR ORDERING. WHEN YOU ORDER A PART, PLEASE REFER TO PARTS LIST.

4-10. Hi-Fi AUDIO PACK SCHEMATIC DIAGRAM

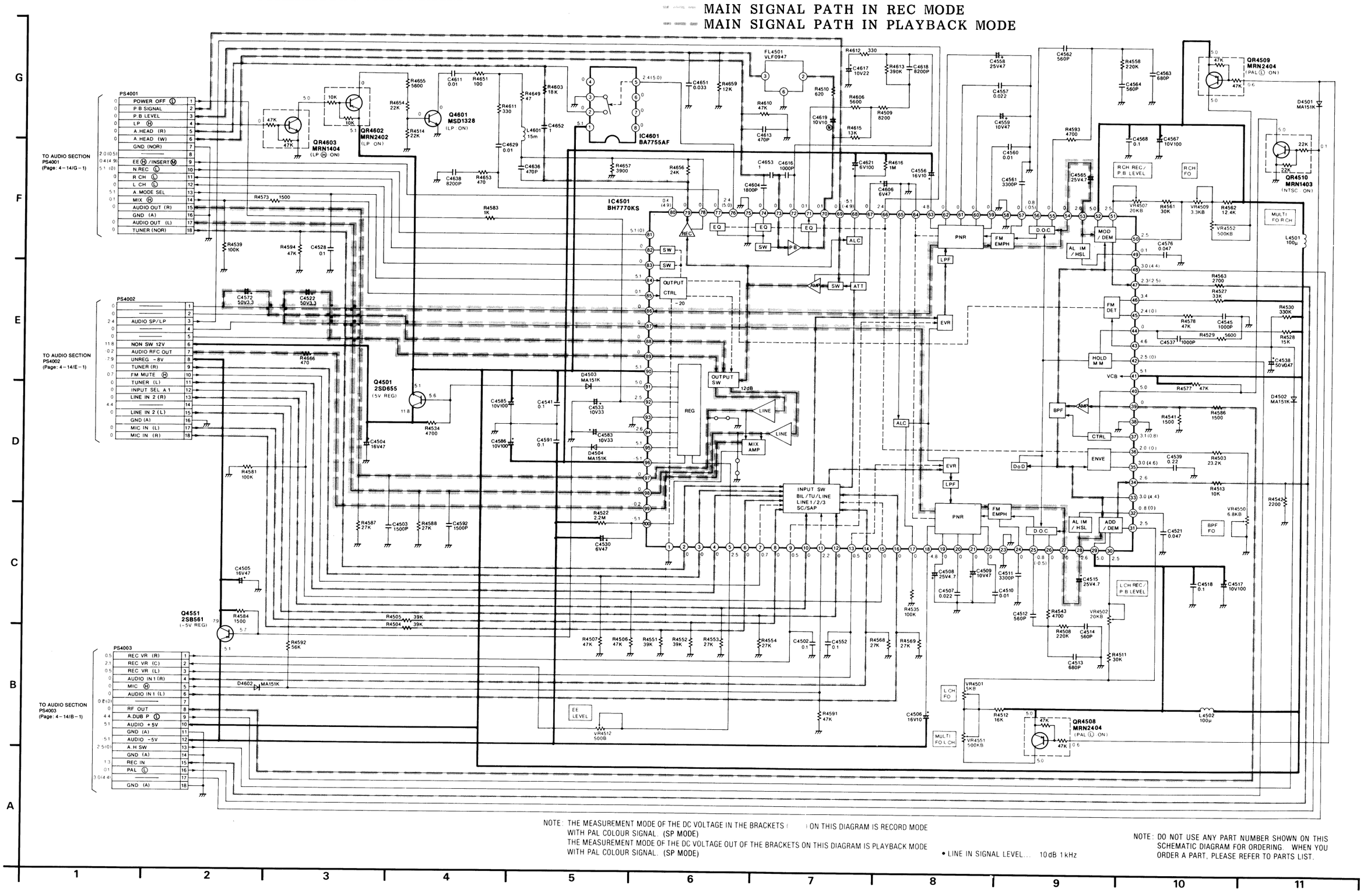

NOTE: THE MEASUREMENT MODE OF THE DC VOLTAGE IN THE BRACKETS ( ) ON THIS DIAGRAM IS RECORD MODE WITH PAL COLOUR SIGNAL. (SP MODE)
THE MEASUREMENT MODE OF THE DC VOLTAGE OUT OF THE BRACKETS ON THIS DIAGRAM IS PLAYBACK MODE WITH PAL COLOUR SIGNAL. (SP MODE)

• LINE IN SIGNAL LEVEL... 10dB 1kHz

NOTE: DO NOT USE ANY PART NUMBER SHOWN ON THIS SCHEMATIC DIAGRAM FOR ORDERING. WHEN YOU ORDER A PART, PLEASE REFER TO PARTS LIST.

4-11. TIMER & VR SCHEMATIC DIAGRAM

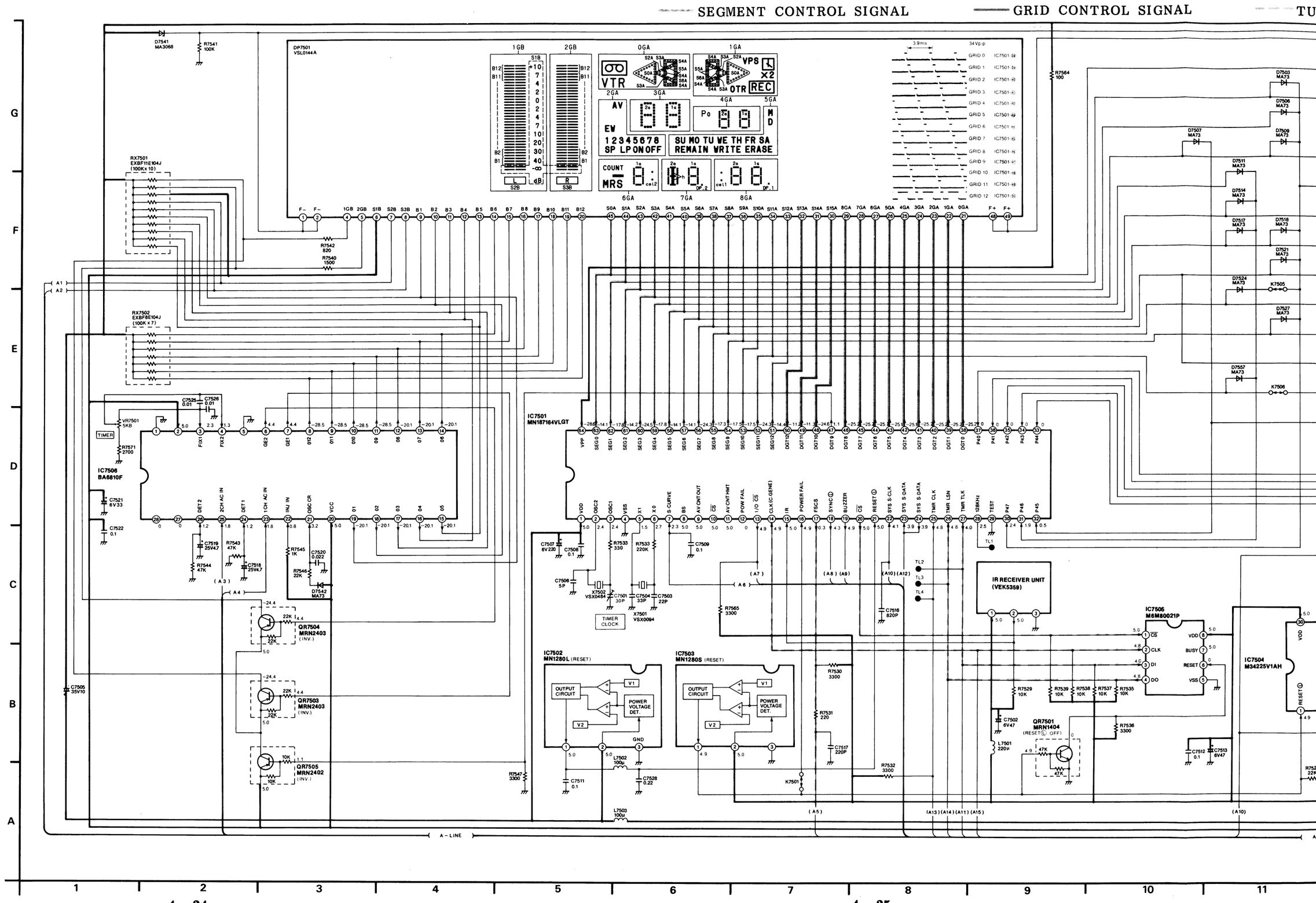

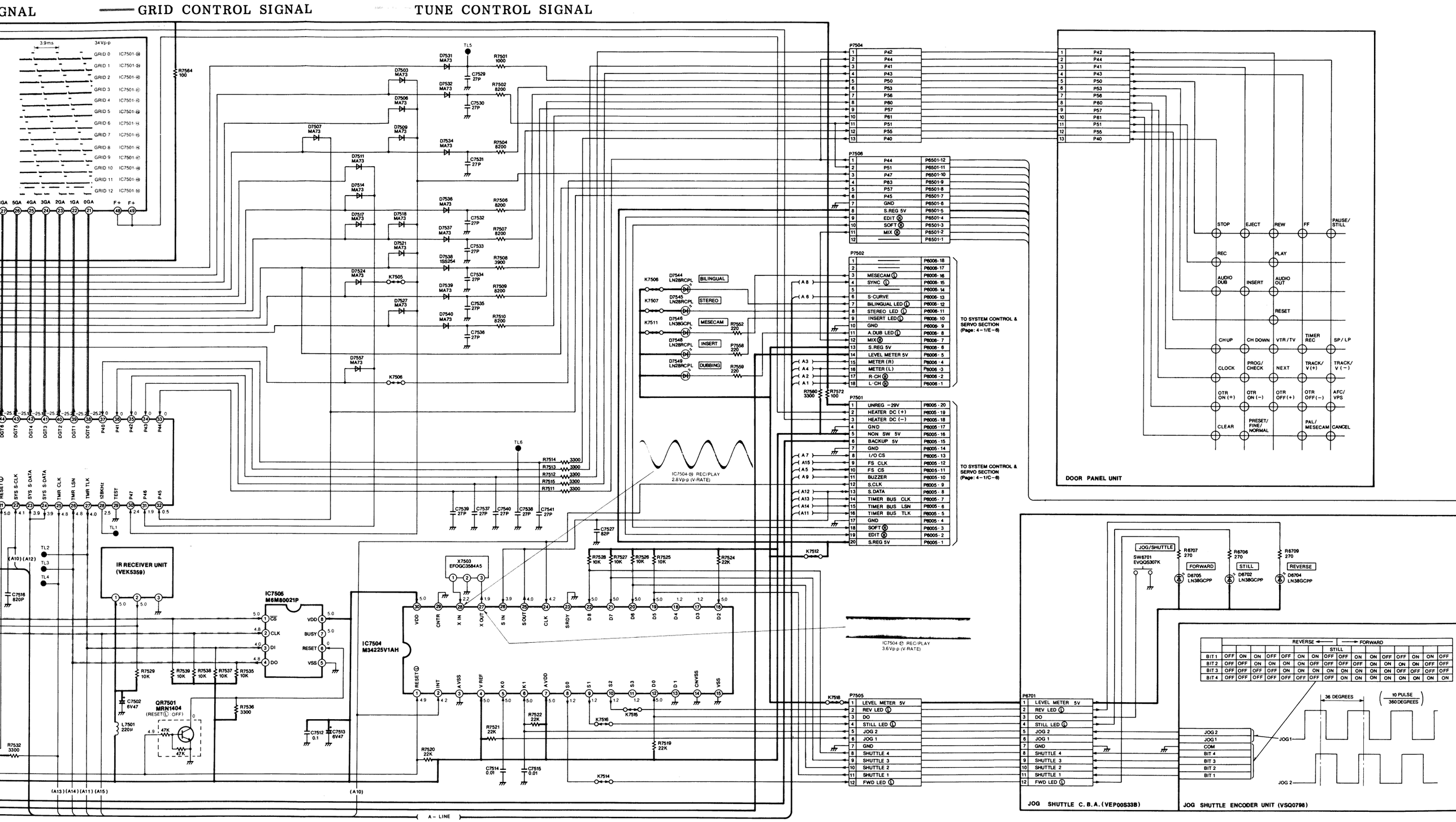
GNAL
GRID CONTROL SIGNAL
TUNE CONTROL SIGNAL
IC7501
IR RECEIVER UNIT (VEK5359)
IC7505 M6M80021P
IC7504 M34225V1AH
X7503 EFOGC3584A5
QR7501 MRN1404
P7504
P7506
P7502
P7501
P7505
P6701
TO SYSTEM CONTROL & SERVO SECTION (Page: 4-1/E-6)
TO SYSTEM CONTROL & SERVO SECTION (Page: 4-1/C-6)
DOOR PANEL UNIT
JOG SHUTTLE C.B.A. (VEP00S33B)
JOG SHUTTLE ENCODER UNIT (VSQ0798)
IC7504 REC/PLAY 2.8Vp-p (V-RATE)
IC7504 REC/PLAY 3.6Vp-p (V-RATE)
A-LINE
NOTE: THE MEASUREMENT MODE OF THE DC VOLTAGE ON THIS DIAGRAM IS STOP MO

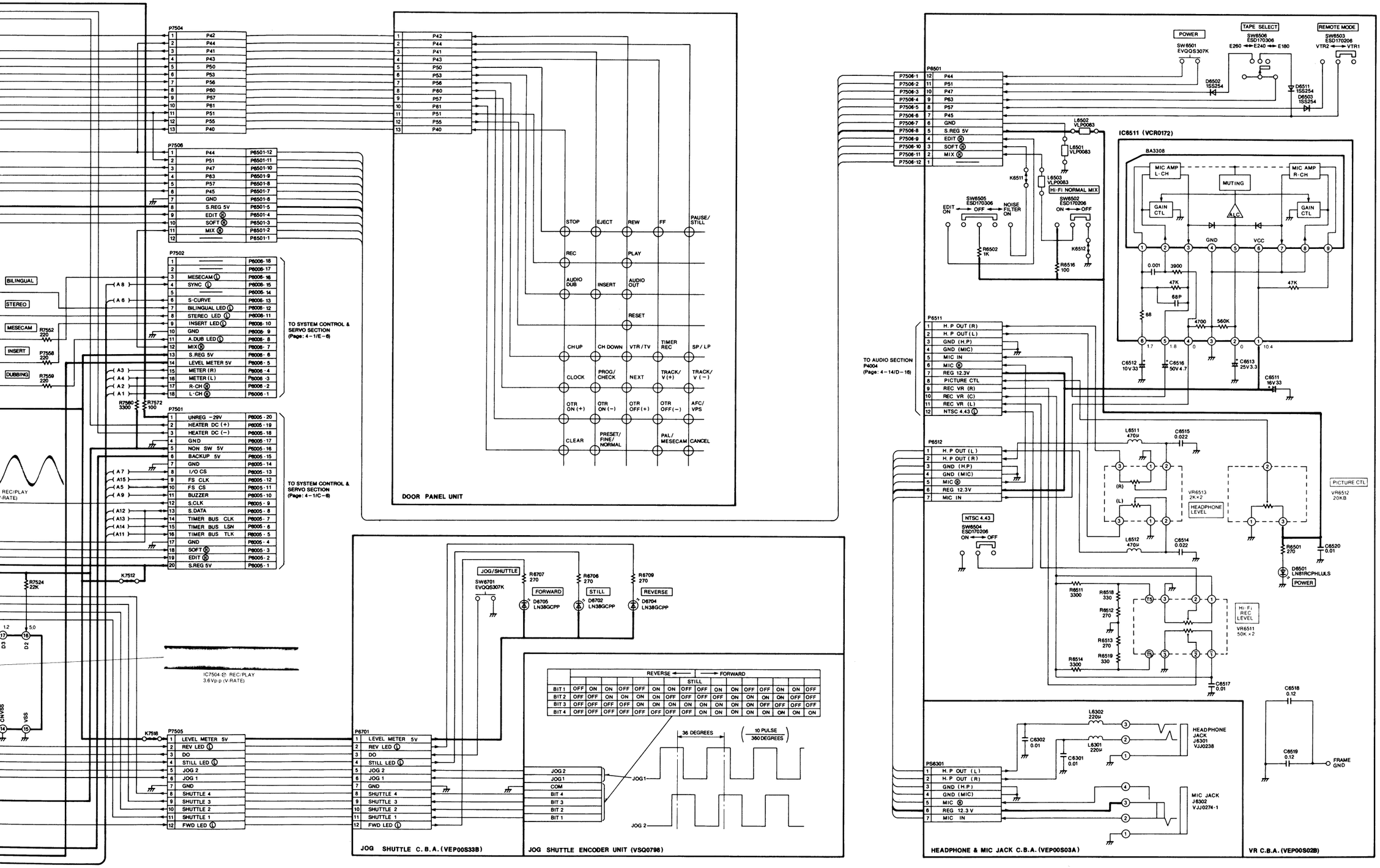

NOTE: THE MEASUREMENT MODE OF THE DC VOLTAGE ON THIS DIAGRAM IS STOP MODE. (SP MODE)

NOTE: DO NOT USE ANY PART NUMBER SHOWN ON THIS SCHEMATIC DIAGRAM FOR ORDERING. WHEN YOU ORDER A PART, PLEASE REFER TO PARTS LIST.

4-12. TV DEMODULATOR PACK SCHEMATIC DIAGRAM

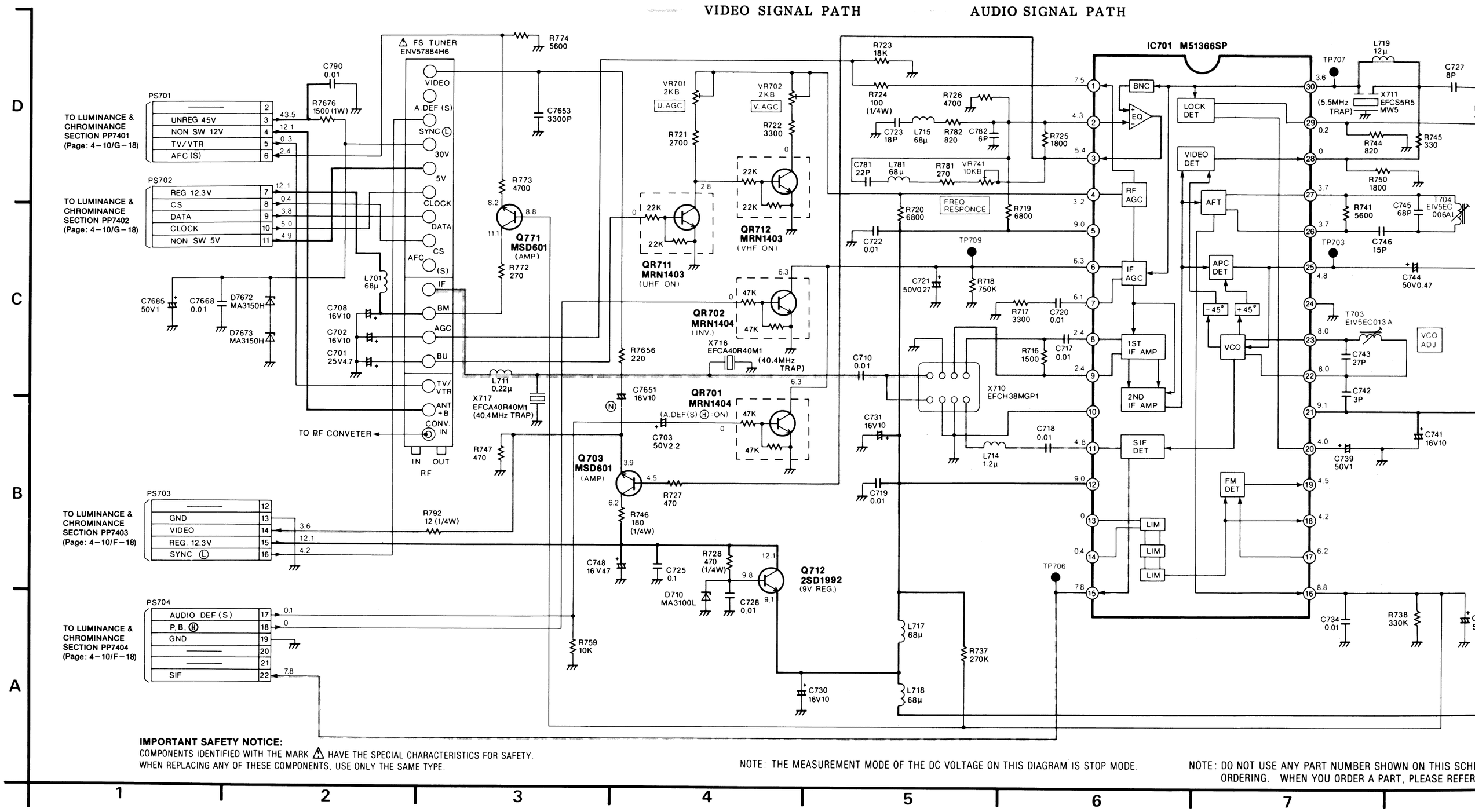

IMPORTANT SAFETY NOTICE:
COMPONENTS IDENTIFIED WITH THE MARK ⚠ HAVE THE SPECIAL CHARACTERISTICS FOR SAFETY.
WHEN REPLACING ANY OF THESE COMPONENTS, USE ONLY THE SAME TYPE.

NOTE: THE MEASUREMENT MODE OF THE DC VOLTAGE ON THIS DIAGRAM IS STOP MODE.

NOTE: DO NOT USE ANY PART NUMBER SHOWN ON THIS SCHE
ORDERING. WHEN YOU ORDER A PART, PLEASE REFER

VIDEO SIGNAL PATH

AUDIO SIGNAL PATH

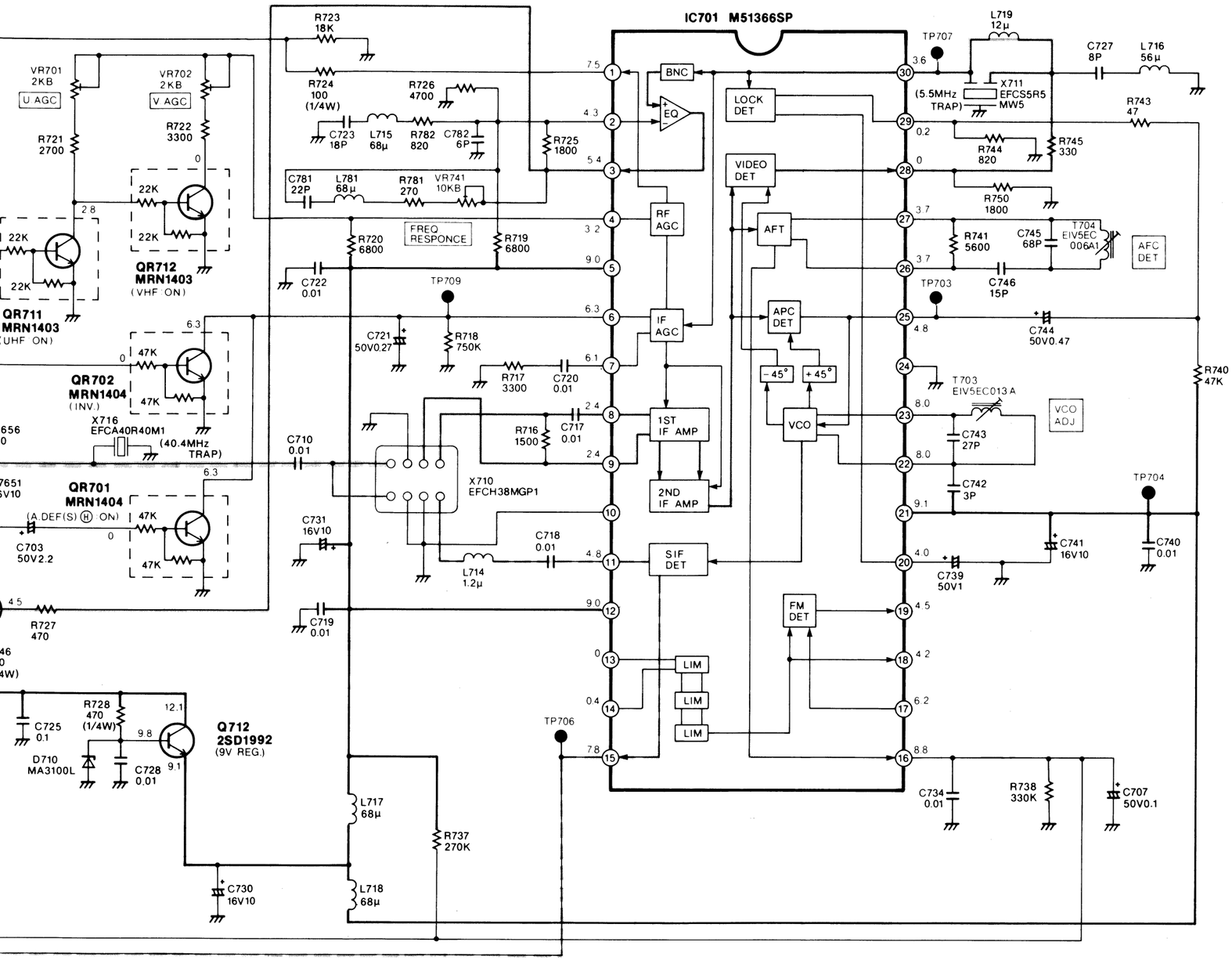

NOTE: THE MEASUREMENT MODE OF THE DC VOLTAGE ON THIS DIAGRAM IS STOP MODE.

NOTE: DO NOT USE ANY PART NUMBER SHOWN ON THIS SCHEMATIC DIAGRAM FOR ORDERING. WHEN YOU ORDER A PART, PLEASE REFER TO PARTS LIST.

4 5 6 7 8

4-13. DECODER PACK SCHEMATIC DIAGRAM

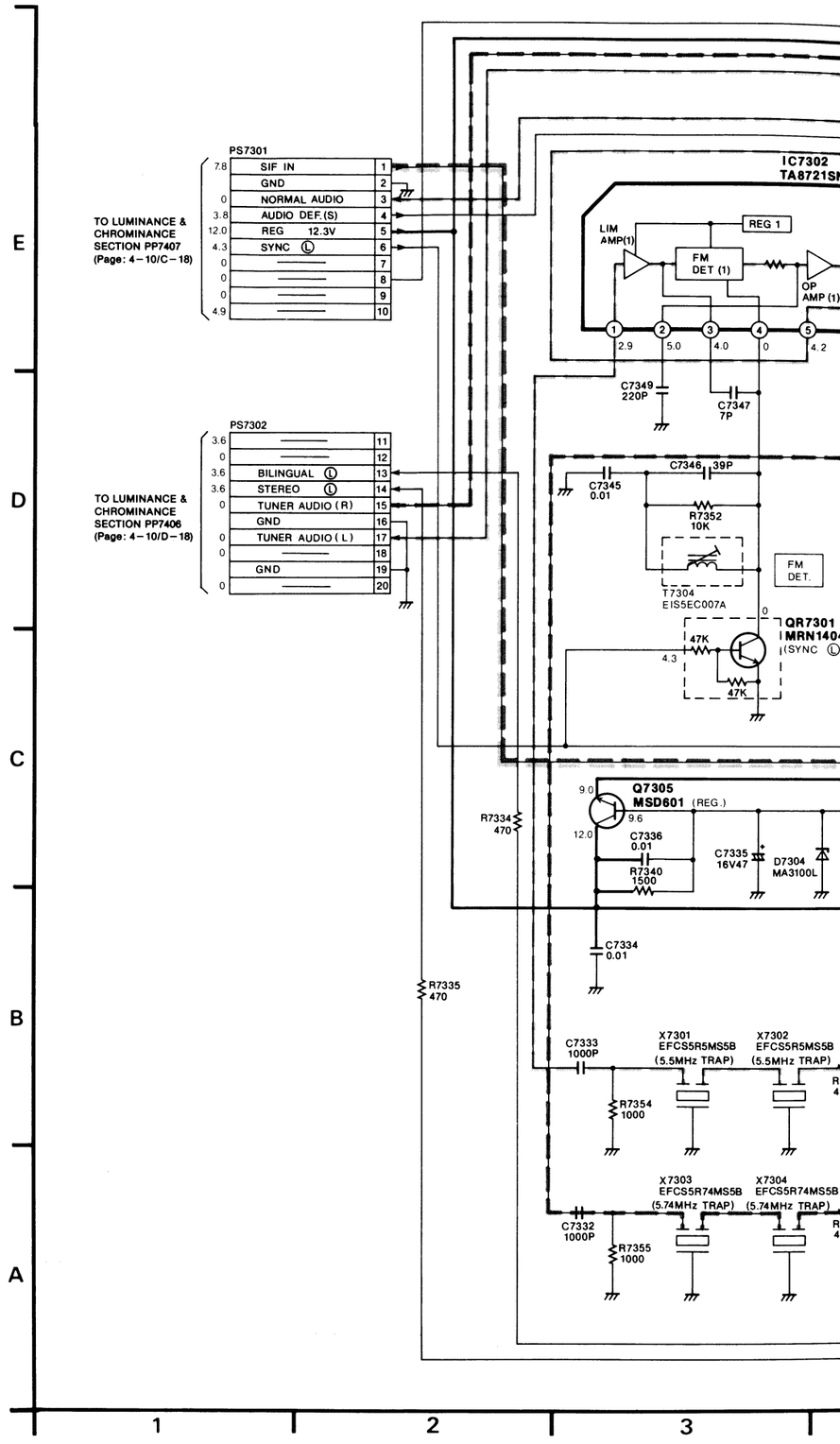

1 2 3

CODER PACK SCHEMATIC DIAGRAM

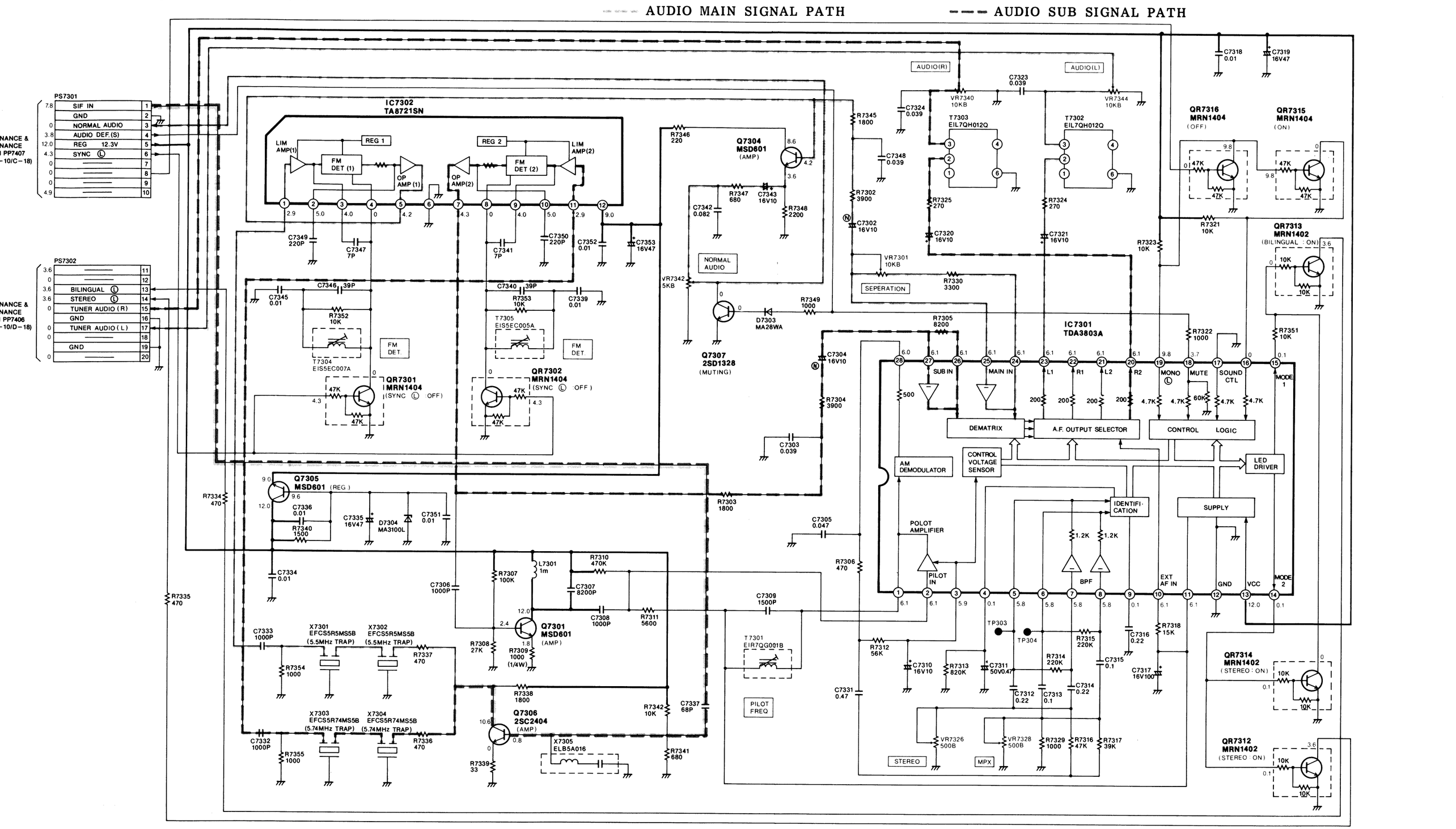

NOTE: THE MEASUREMENT MODE OF THE DC VOLTAGE ON THIS DIAGRAM IS STOP MODE.

NOTE: DO NOT USE ANY PART NUMBER SHOWN ON THIS SCHEMATIC DIAGRAM FOR ORDERING. WHEN YOU ORDER A PART, PLEASE REFER TO PARTS LIST.

1 2 3 4 5 6 7 8 9 10

4-14. VPS PACK SCHEMATIC DIAGRAM

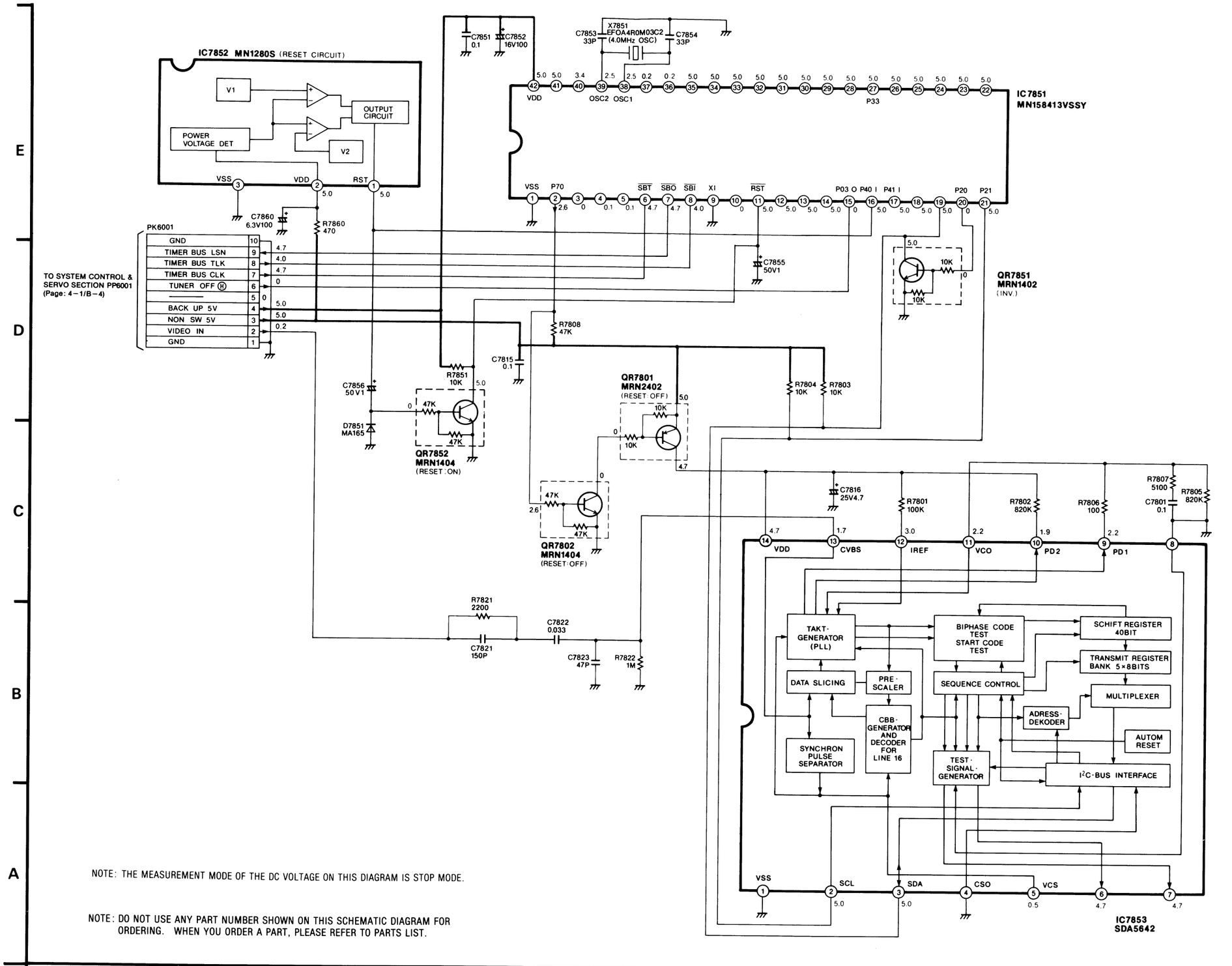

NOTE: THE MEASUREMENT MODE OF THE DC VOLTAGE ON THIS DIAGRAM IS STOP MODE.

NOTE: DO NOT USE ANY PART NUMBER SHOWN ON THIS SCHEMATIC DIAGRAM FOR ORDERING. WHEN YOU ORDER A PART, PLEASE REFER TO PARTS LIST.

4-15. POWER C.B.A. (VEP01487A)

POWER C.B.A.	
Transistor	
Q1101	A-4
Integrated Circuit	
IC1101 IC1102 IC1103	A-3 B-4 A-4
Connector	
P1101 P1102	B-1 B-4

ADDRESS INFORMATION

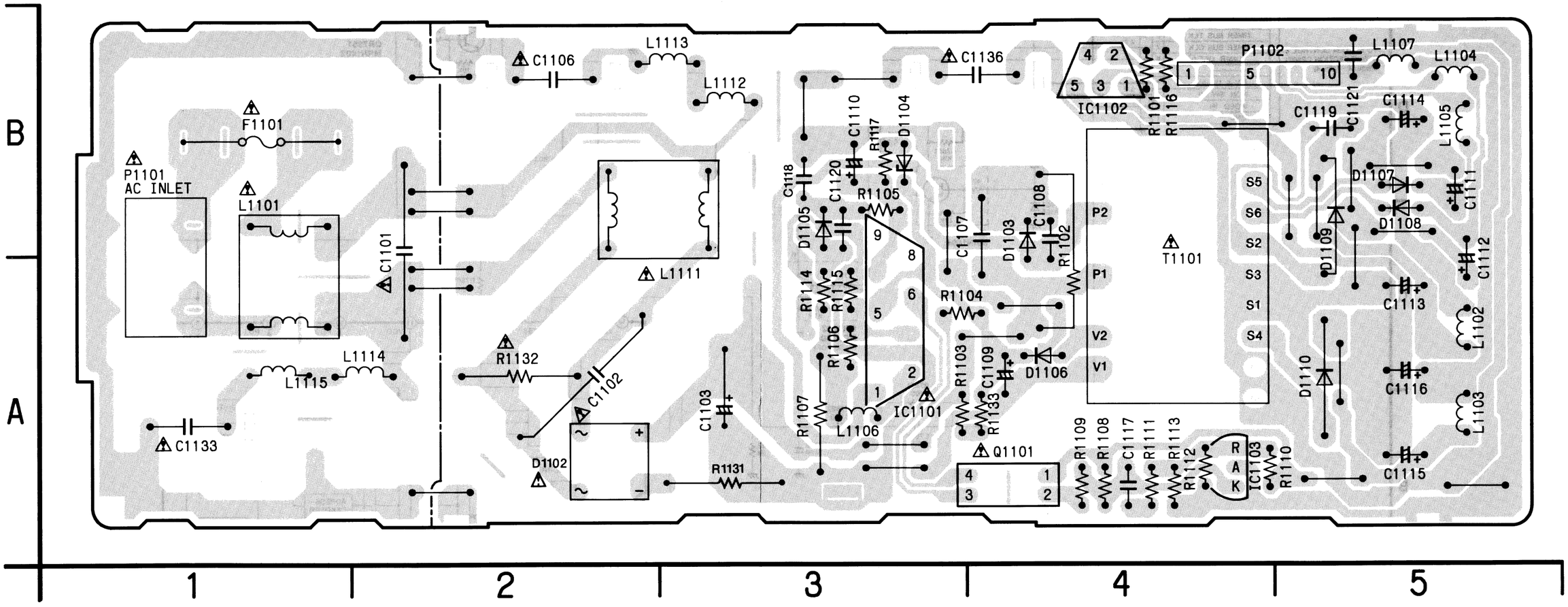

4-16. MAIN C.B.A. (VEP06795B)

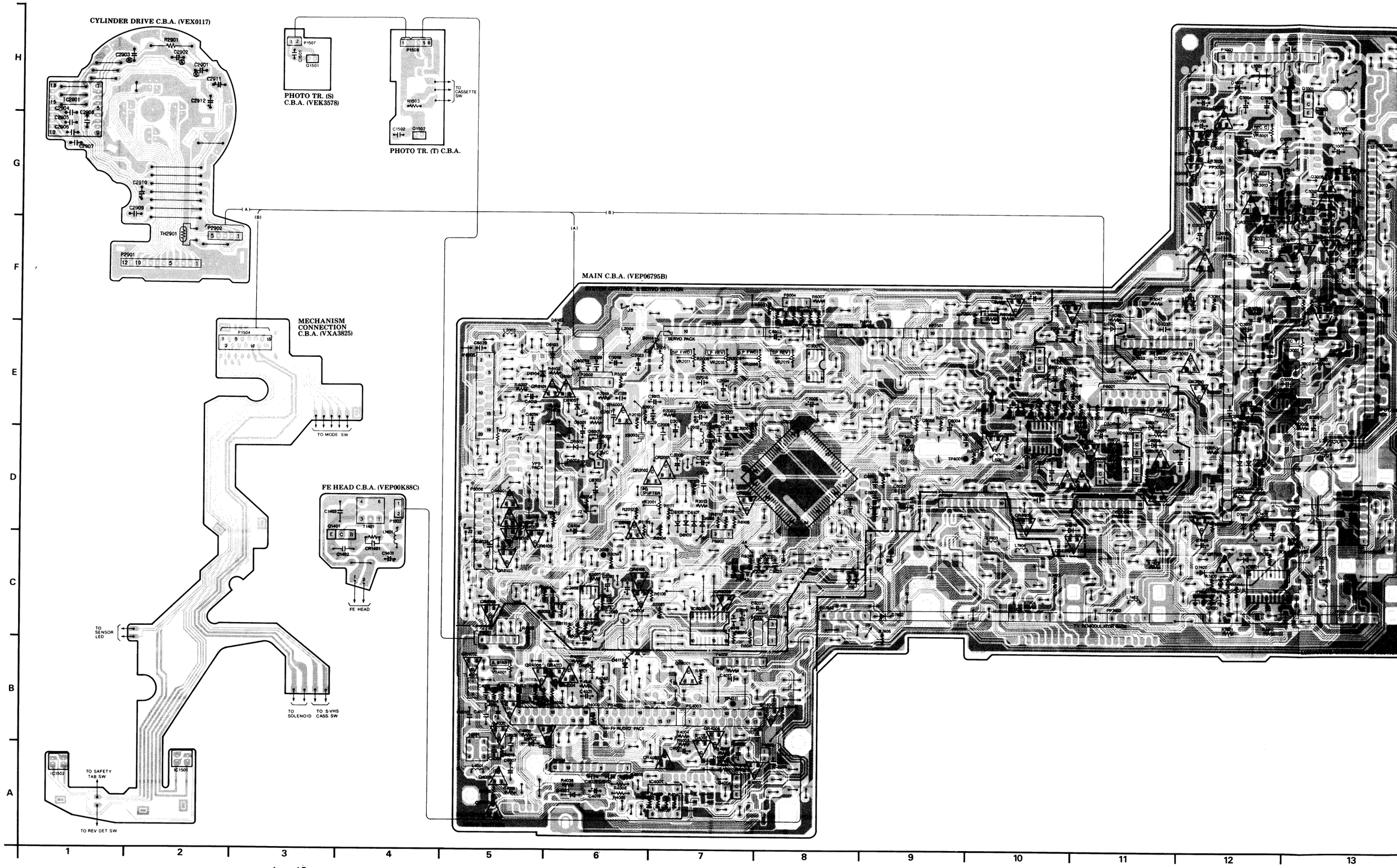

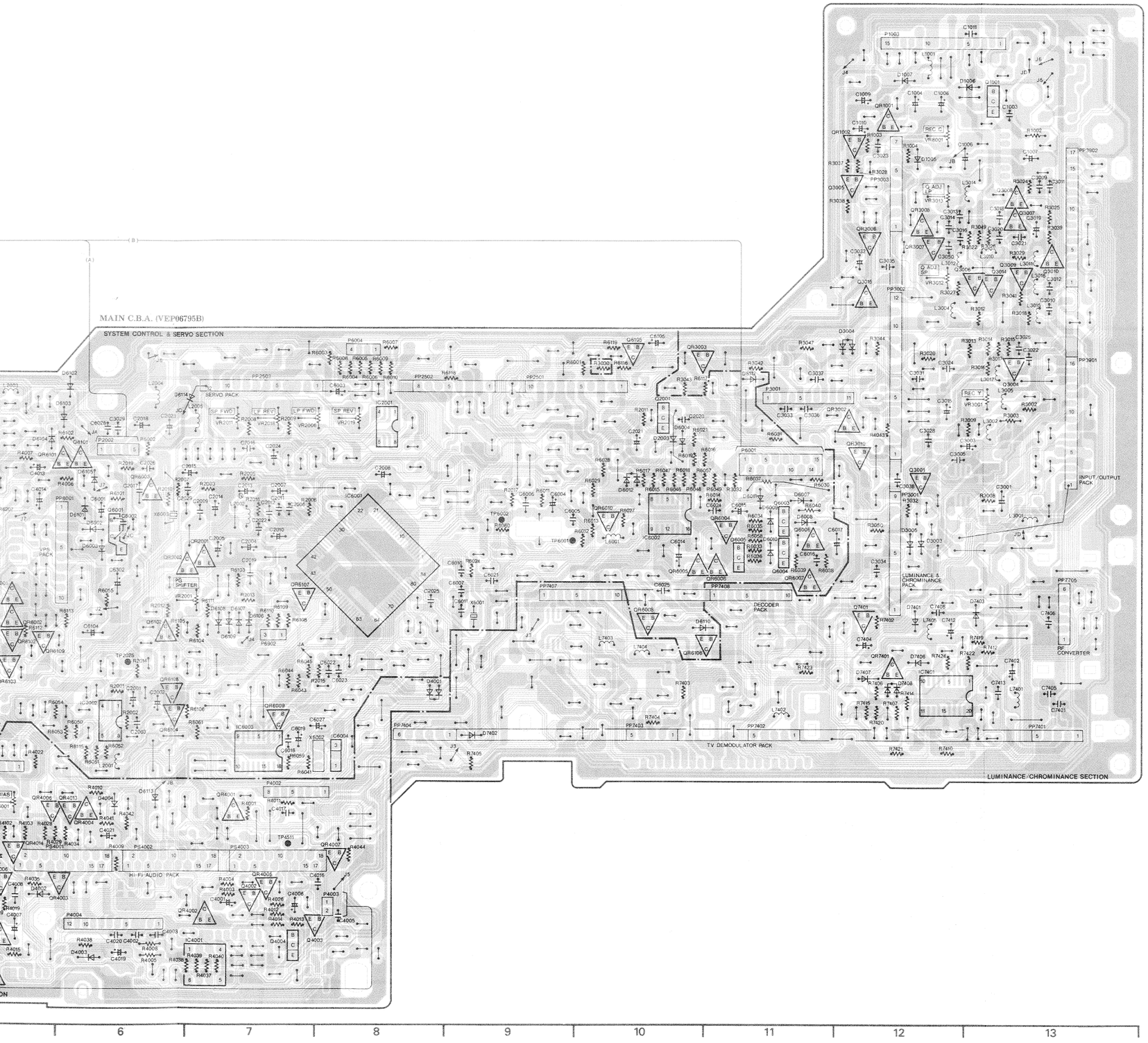

MAIN C.B.A. ADDRESS INFORMATION

SYSTEM CONTROL & SERVO Section	
Transistor	
Q1401	D-3
Q1501	H-3
Q1502	G-4
Q2001	E-10
Q6001	D-6
Q6003	D-11
Q6004	D-11
Q6005	D-11
Q6006	D-11
Q6101	E-6
Q6102	C-6
Transistor & Resistor	
QR2001	D-7
QR2002	D-6
QR6001	D-5
QR6002	D-5
QR6003	E-6
QR6004	D-11
QR6005	D-10
QR6006	D-11
QR6007	D-11
QR6008	D-10
QR6009	C-7
QR6010	D-10
QR6101	E-6
QR6102	C-5
QR6103	C-5
QR6104	C-6
QR6105	F-10
QR6106	C-11
QR6107	C-7
QR6108	C-6
QR6109	C-5
Integrated Circuit	
IC1501	A-2
IC1502	A-1
IC2001	E-8
IC2002	C-6
IC2901	H-1
IC6001	E-8
IC6002	D-10
IC6003	C-7
IC6004	C-8
Test Point	
TP2026	C-6
TP6001	D-9
TP6002	D-9
Adjustment	
VR2001	D-7
VR2006	E-7
VR2011	E-7
VR2018	E-7
VR2019	E-8
Connector	
P1502	D-4
P1504	E-3
P1507	H-3
P1508	H-4
P2002	E-6
P2901	F-2
P2902	F-2
P6001	E-11
P6004	F-8
P6005	E-5
P6006	D-5
P6902	C-7
PP2501	E-9
PP2502	E-8
PP2503	E-7
PP6001	E-6

ADDRESS INFORMATION

LUMINANCE & CHROMINANCE Section	
Transistor	
Q1001	H-13
Q3001	E-12
Q3004	E-13
Q3005	G-12
Q3006	F-13
Q3007	G-13
Q3008	G-13
Q3009	F-13
Q3010	F-13
Q3014	F-13
Q3015	F-12
Q7401	D-12
Transistor & Resistor	
QR1001	H-12
QR1002	G-12
QR3002	E-12
QR3003	F-10
QR3005	G-12
QR3006	G-12
QR3007	F-12
QR3008	G-13
QR3010	E-12
QR7401	C-12
Integrated Circuit	
IC7401	C-12
Adjustment	
VR3001	E-13
VR3012	F-12
VR3013	G-12
VR8001	G-12
Connector	
P1003	H-12
P3001	E-11
PP3001	E-12
PP3002	F-12
PP3003	G-12
PP3901	E-13
PP3902	G-13
PP7401	C-13
PP7402	C-11
PP7403	C-10
PP7404	C-8
PP7705	D-13
PP7406	D-11
PP7407	D-9

ADDRESS INFORMATION

AUDIO Section	
Transistor	
Q4002	A-7
Q4003	A-8
Q4005	A-5
Q4006	B-5
Transistor & Resistor	
QR4001	B-7
QR4002	A-7
QR4003	B-6
QR4004	B-6
QR4005	B-7
QR4006	B-5
QR4007	B-8
QR4010	A-5
QR4012	B-5
QR4013	B-6
QR4014	B-5
Integrated Circuit	
IC4001	A-7
Test Point	
TP4511	B-7
Adjustment	
VR4001	B-5
Connector	
P4001	B-5
P4002	B-7
P4003	A-8
P4004	A-6
PS4001	B-6
PS4002	B-6
PS4003	B-7

ADDRESS INFORMATION

4-17. LUMINANCE & CHROMINANCE PACK C.B.A. (VEP03928A)

4-18. S-VHS

LUMINANCE & CHROMINANCE PACK C.B.A.			
Transistor		**Integrated Circuit**	
Q301	B-5	IC301	B-6
Q302	B-5	IC302	A-4
Q303	B-5	IC801	B-1
Q801	A-4	**Adjustment**	
Q802	A-3	VR301	A-6
Q803	B-2	VR801	B-2
Q804	B-3	VR802	B-3
Q805	B-3	VR803	B-2
Transistor & Resistor		**Connector**	
QR301	B-4	PK301	C-5
QR303	B-6	PK302	C-3
QR304	B-5	PK303	C-2
QR305	C-5	PP801	A-1
QR306	B-4	PP802	A-2
QR801	C-5	PP803	A-3
QR803	B-2	PP804	B-2
QR805	B-4		
QR807	C-4		

ADDRESS INFORMATION

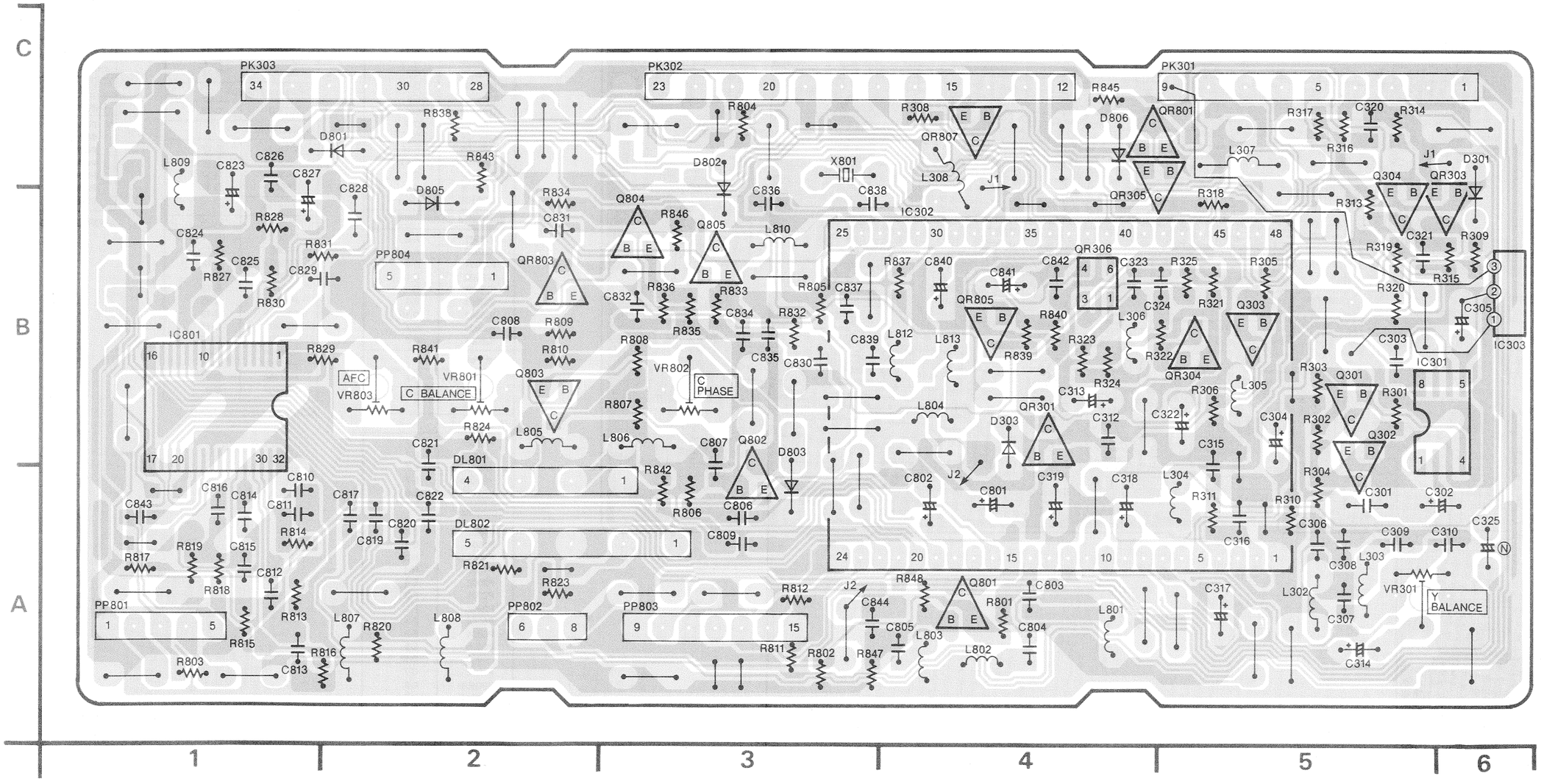

LUMINANCE & CHROMINANCE PACK C.B.A.			
Transistor		**Integrated Circuit**	
Q301	B-5	IC301	B-6
Q302	B-5	IC302	A-4
Q303	B-5	IC801	B-1
Q801	A-4	**Adjustment**	
Q802	A-3	VR301	A-6
Q803	B-2	VR801	B-2
Q804	B-3	VR802	B-3
Q805	B-3	VR803	B-2
Transistor & Resistor		**Connector**	
QR301	B-4	PK301	C-5
QR303	B-6	PK302	C-3
QR304	B-5	PK303	C-2
QR305	C-5	PP801	A-1
QR306	B-4	PP802	A-2
QR801	C-5	PP803	A-3
QR803	B-2	PP804	B-2
QR805	B-4		
QR807	C-4		

ADDRESS INFORMATION

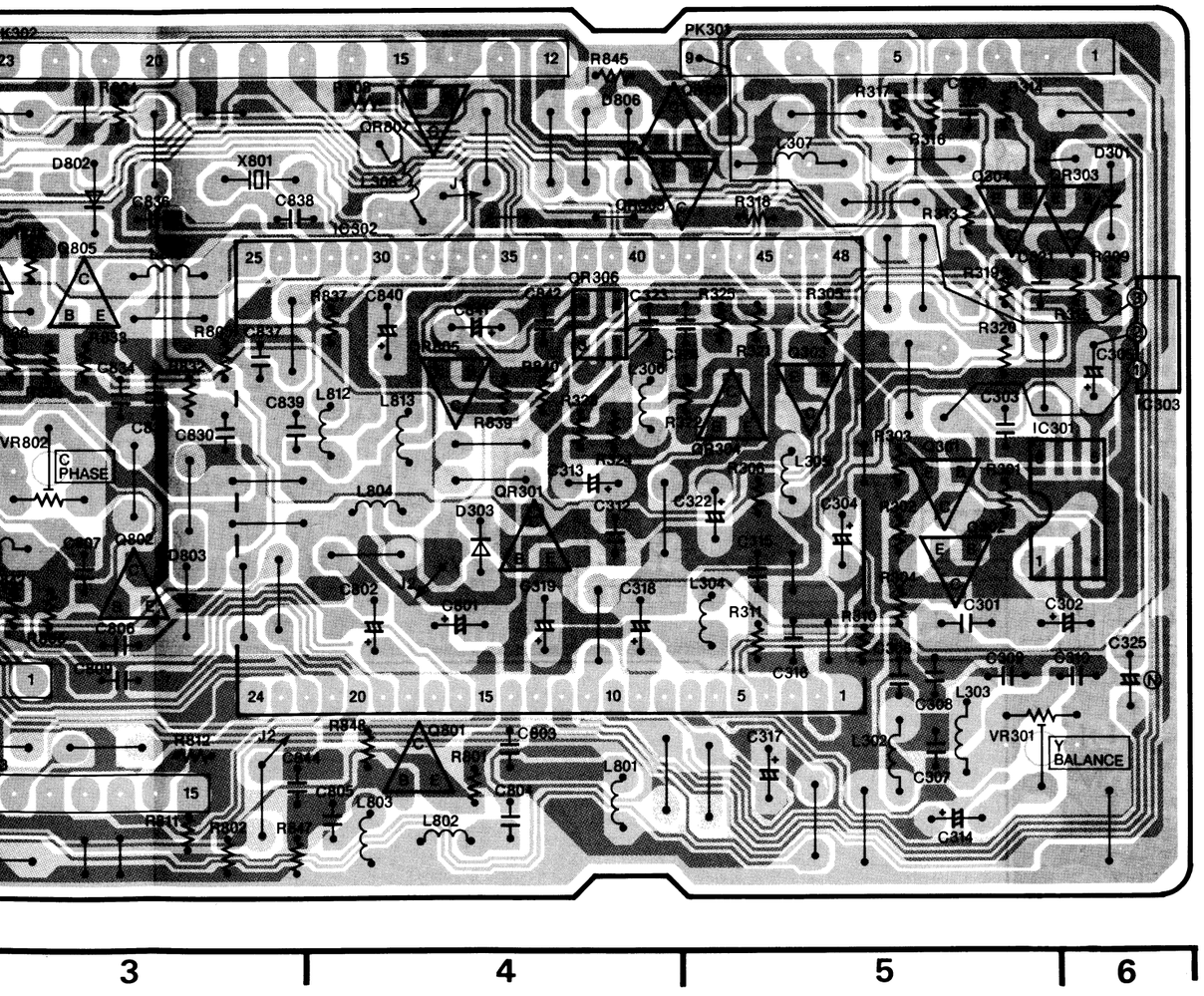

4-18. S-VHS P.B. PACK C.B.A. (VEP03920A)

S-VHS P.B. PACK C.B.A.	
Transistor	
Q5001	A-1
Q5002	A-1
Q5003	A-1
Q5005	A-1
Q5006	A-1
Q5007	B-2
Q5008	B-2
Q5009	A-2
Q5010	A-2
Q5011	A-2
Q5012	A-2
Q5013	A-2
Connector	
PS5001	A-2

ADDRESS INFORMATION

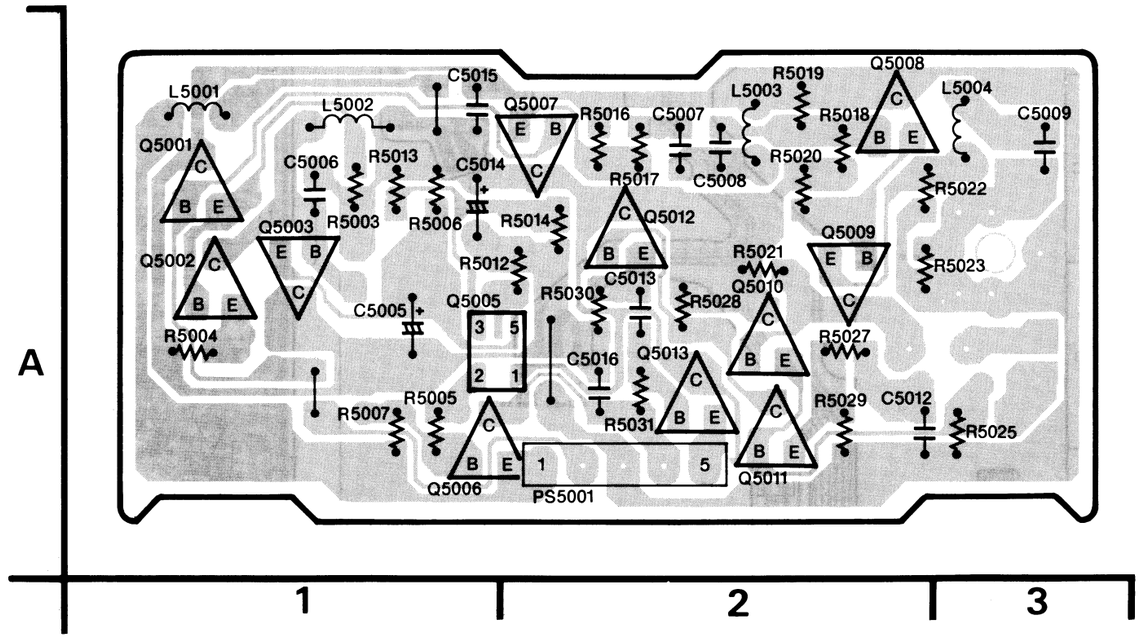

4-19. SUB SERVO PACK C.B.A. (VEP06796B)

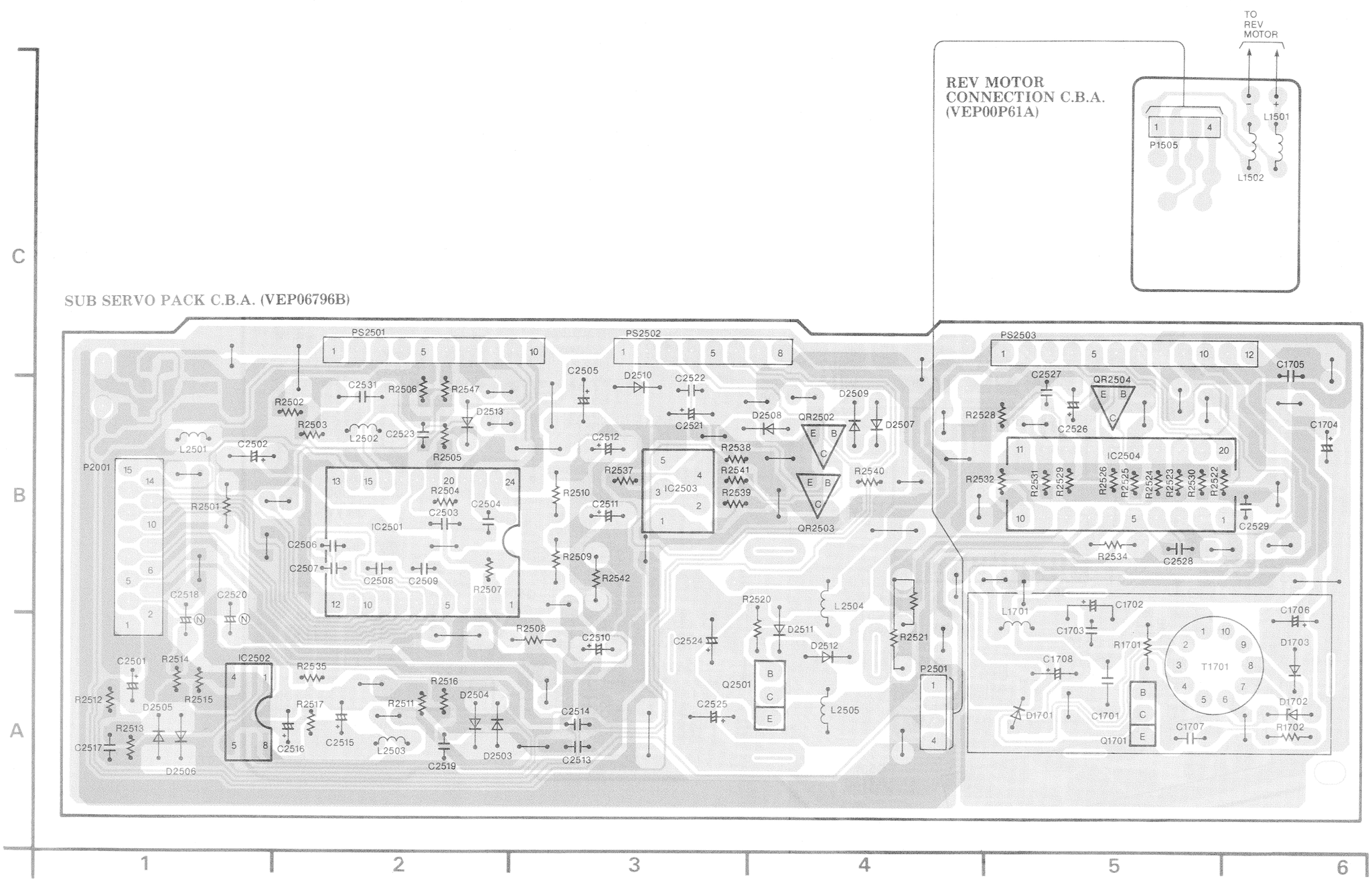

SUB SERVO PACK C.B.A.	
Transistor	
Q1701	A-5
Q2501	A-3
Transistor & Resistor	
QR2502	B-4
QR2503	B-4
QR2504	B-5
Integrated Circuit	
IC2501	B-2
IC2502	A-1
IC2503	B-3
IC2504	B-5
Connector	
P2001	B-1
P2501	A-4
PS2501	B-2
PS2502	B-3
PS2503	B-5

ADDRESS INFORMATION

4-20. HEAD AMP C.B.A. (VEP05178A)

HEAD AMP C.B.A.	
Transistor	
Q501	A-3
Q502	A-3
Integrated Circuit	
IC501	B-2
IC502	A-4
IC551	B-4
Test Point	
TP507	B-1
TP508	B-1
TL551	B-4
Connector	
P501	B-1
P502	A-1
P551	B-3

ADDRESS INFORMATION

4-21. INPUT/OUTPUT PACK C.B.A. (VEP03912A)

INPUT/OUTPUT PACK C.B.A. (VEP03912A)

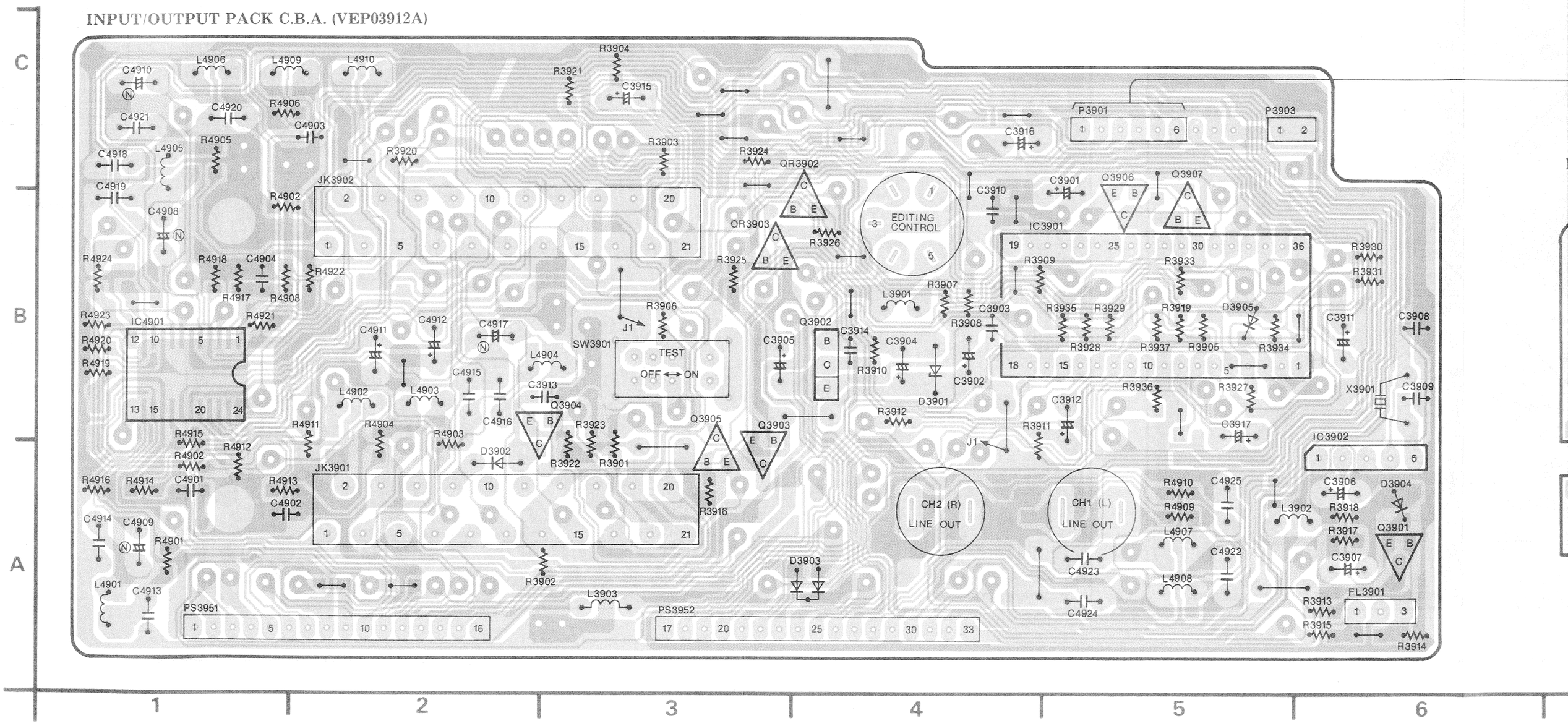

INPUT/OUTPUT PACK C.B.A.			
Transistor		**Integrated Circuit**	
Q3901	A-6	IC4901	B-1
Q3902	B-4	IC3901	B-5
Q3903	B-3	IC3902	A-6
Q3904	A-2	**Connector**	
Q3905	B-3	PS3951	A-1
Q3906	C-5	PS3952	A-3
Q3907	C-5	P3901	C-5
Transistor & Resistor		P3903	C-5
QR3902	B-4	P4801	B-8
QR3903	B-3	P4802	B-7

ADDRESS INFORMATION

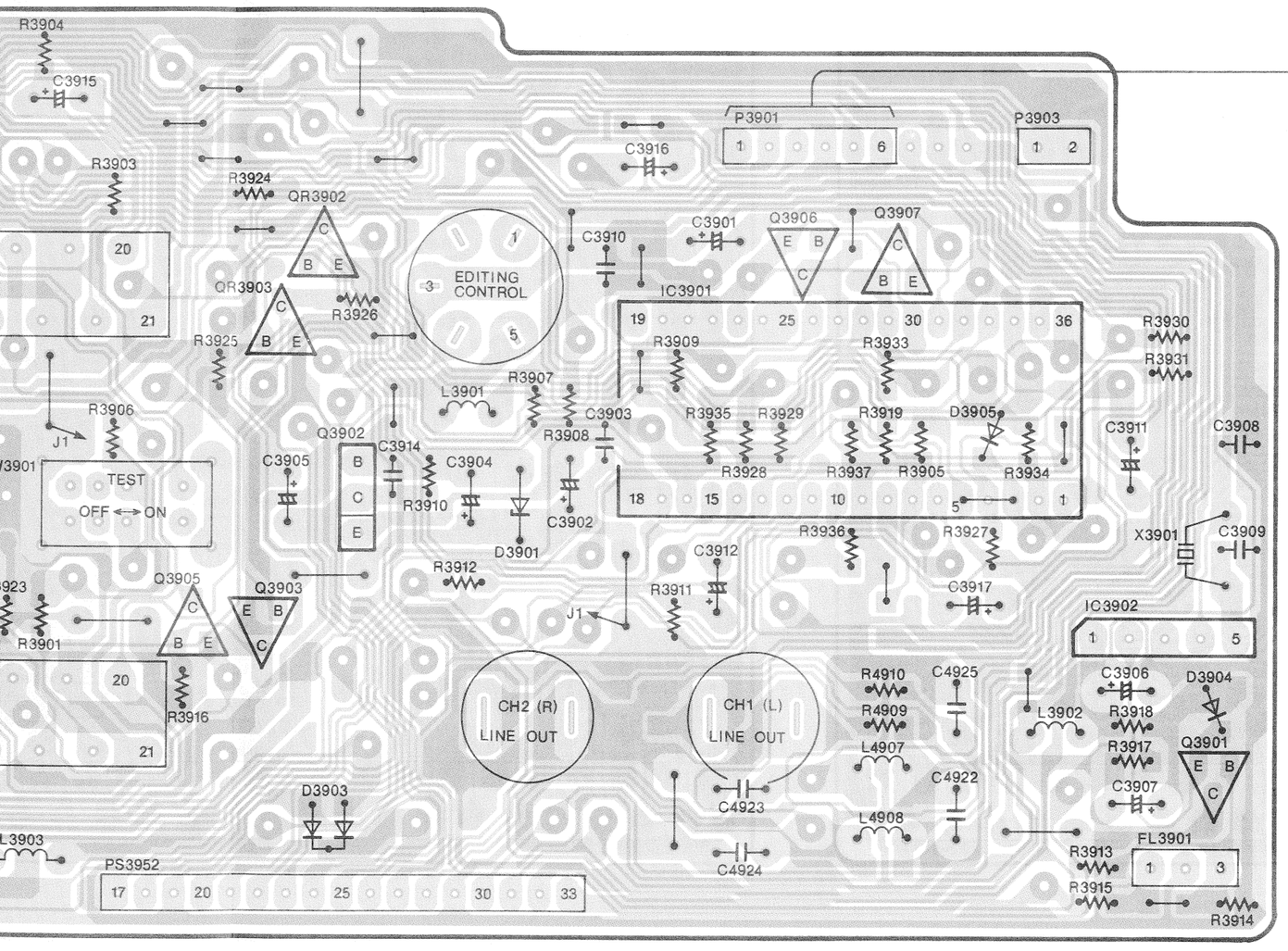

FRONT INPUT C.B.A. (VEP00S04A)

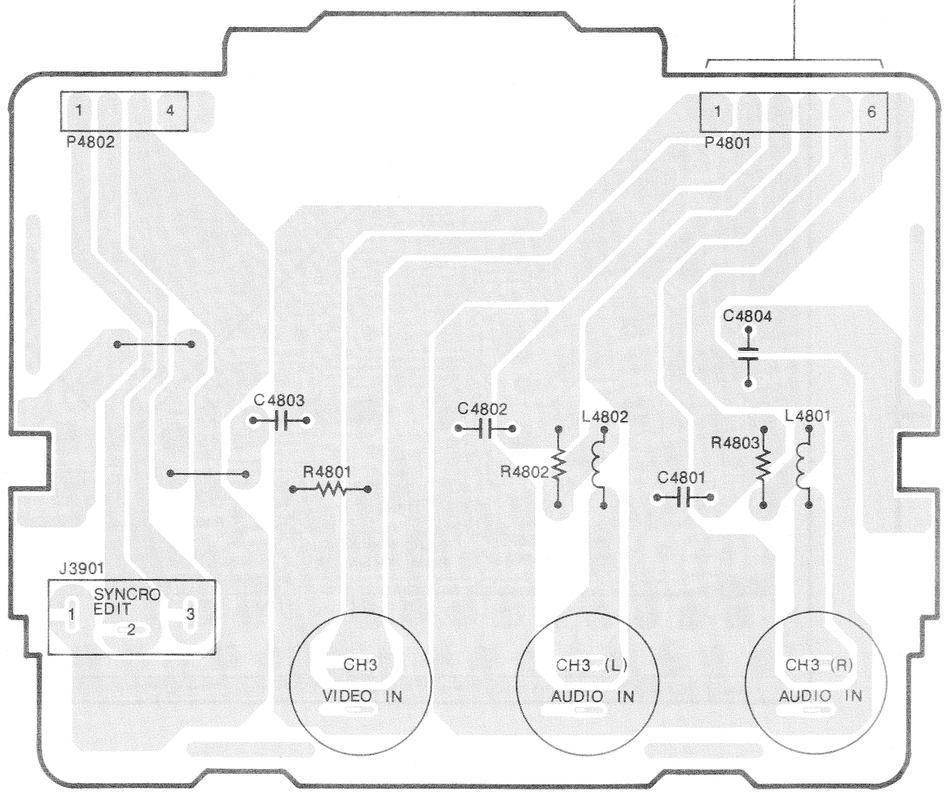

4-22. Hi-Fi AUDIO PACK C.B.A. (VEP04361B)

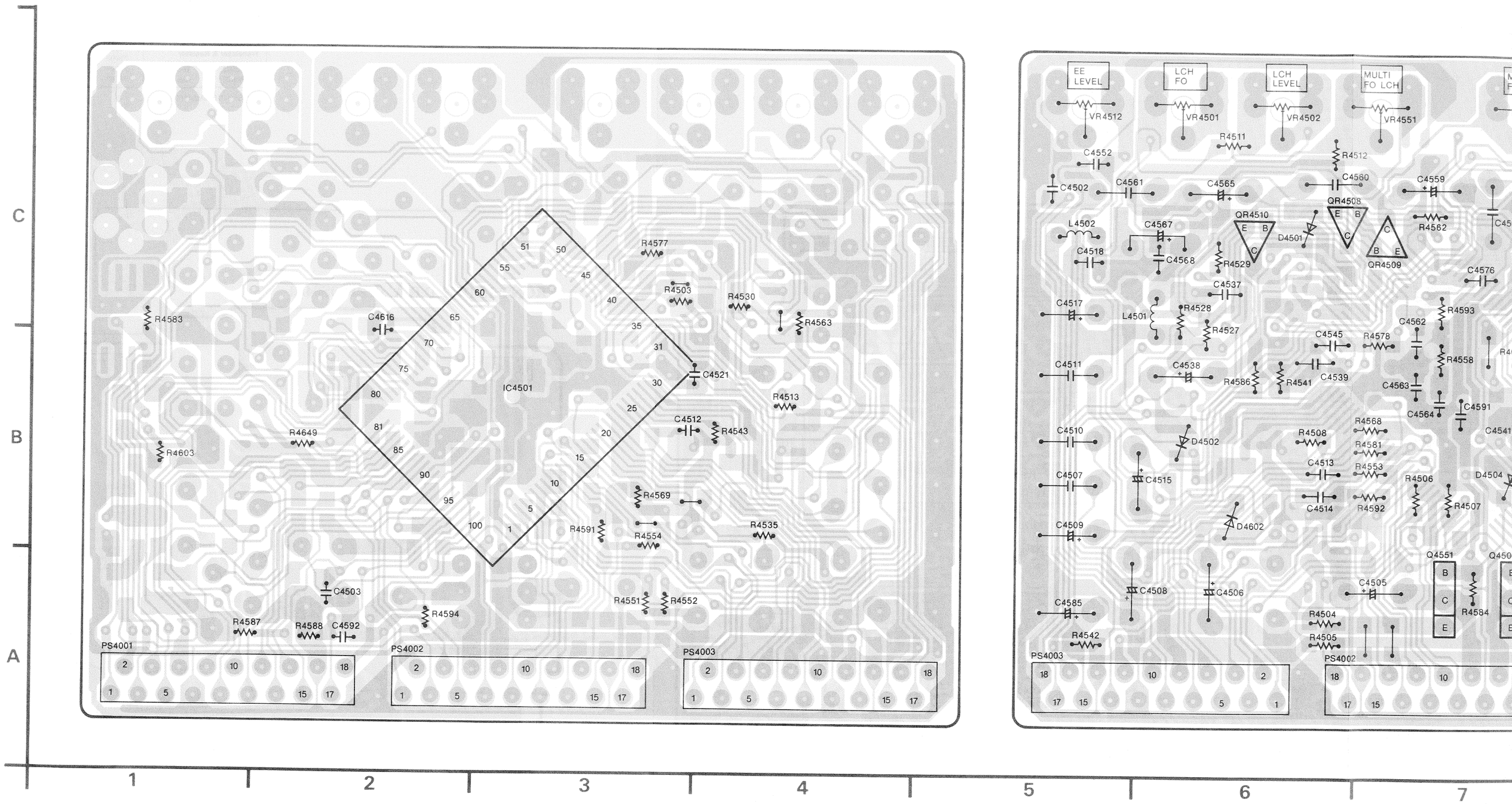

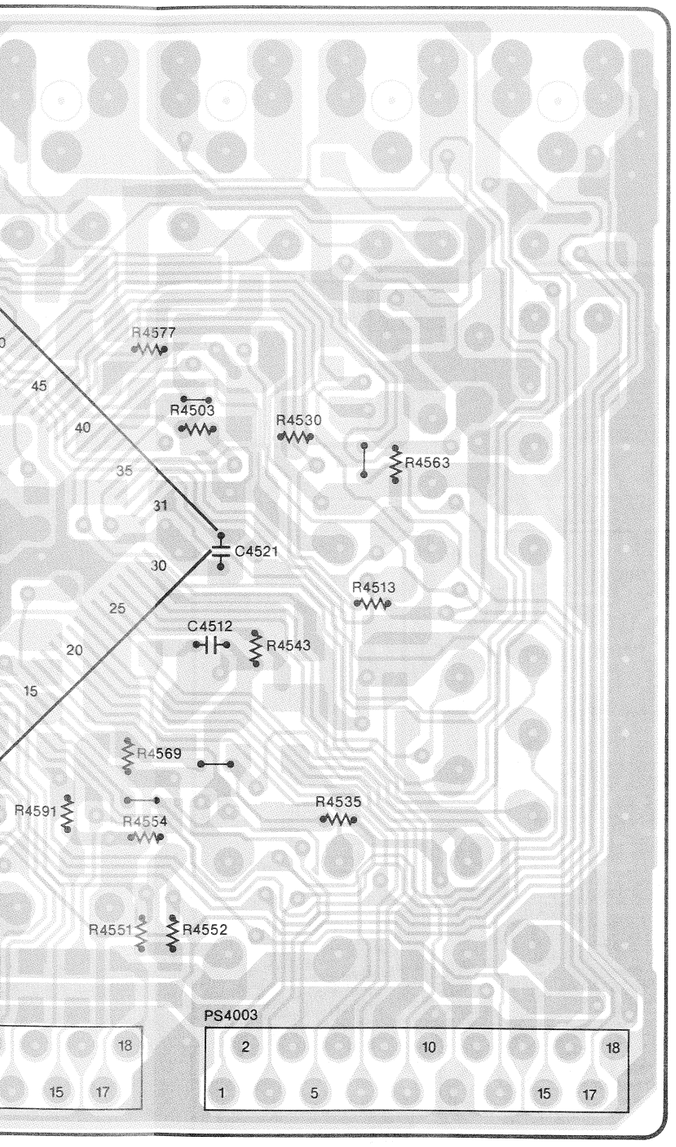

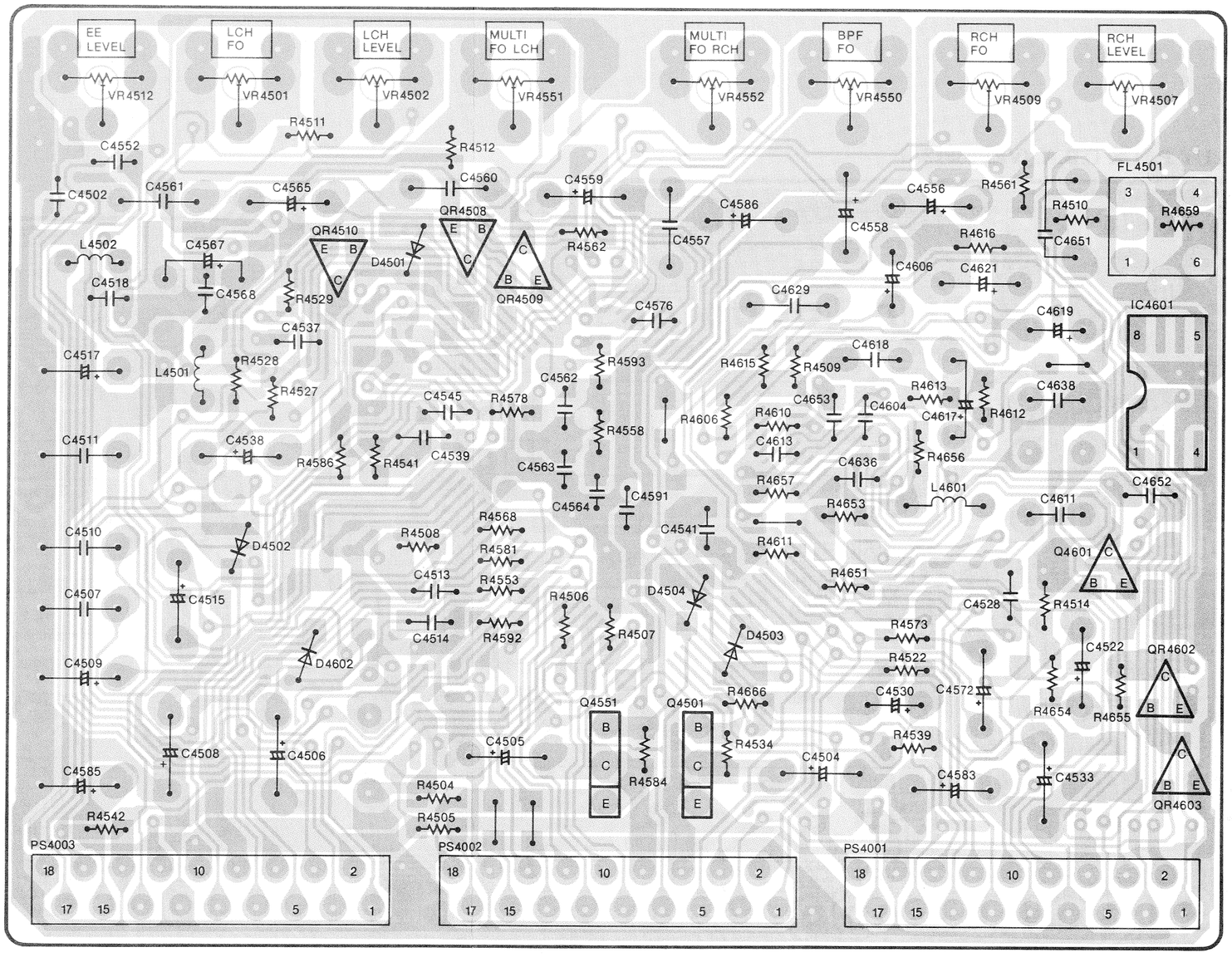

Hi-Fi AUDIO PACK C.B.A.	
Transistor	
Q4501	A-7
Q4551	A-7
Q4601	B-8
Transistor & Resistor	
QR4508	C-6
QR4509	C-7
QR4510	C-6
QR4602	B-8
QR4603	A-8
Integrated Circuit	
IC4501	B-3
IC4601	C-8
Adjustment	
VR4501	C-6
VR4502	C-6
VR4507	C-8
VR4509	C-8
VR4512	C-5
VR4550	C-8
VR4551	C-7
VR4552	C-7
Connector	
PS4001	A-1
PS4001	A-8
PS4002	A-2
PS4002	A-6
PS4003	A-4
PS4003	A-5

ADDRESS INFORMATION

4-23. TIMER C.B.A. (VEP07674B) & VR C.B.A. (VEP00S02B)

JOG SHUTTLE C.B.A. (VEP00S33B)

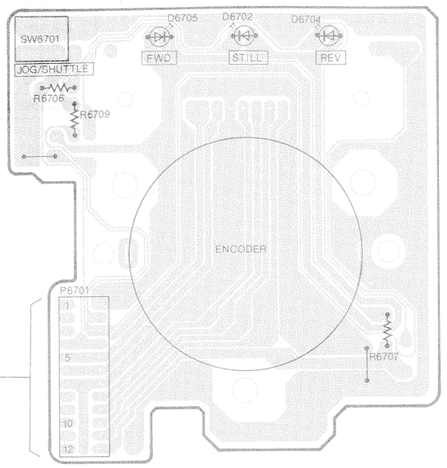

TIMER C.B.A. (VEP07674B)

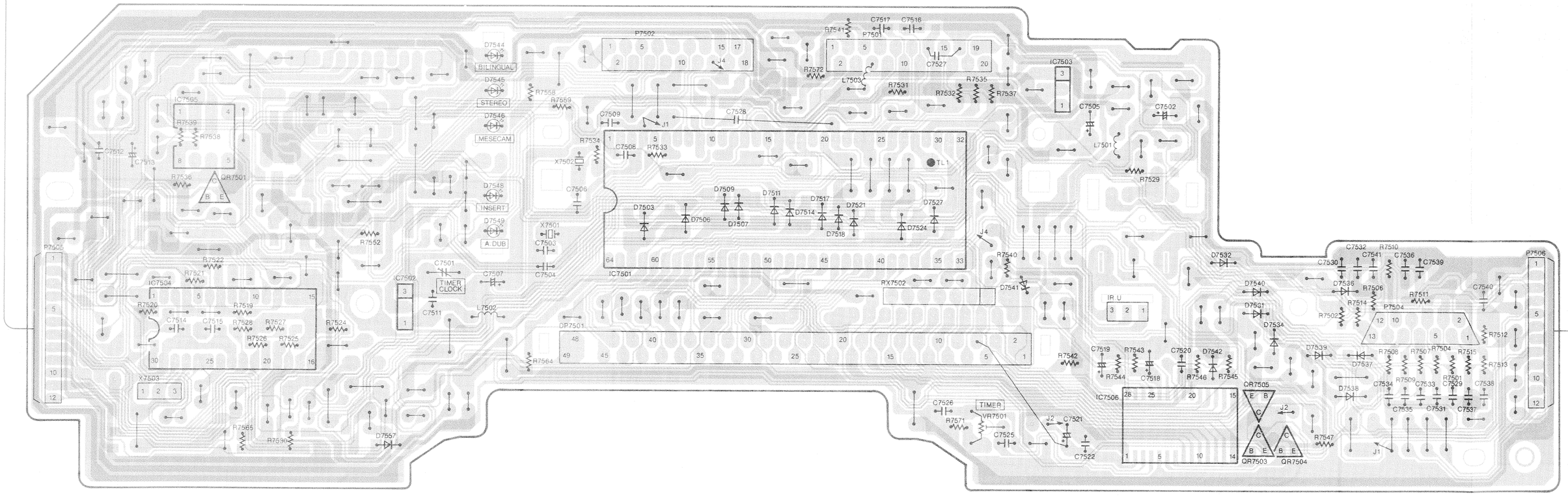

TIMER & VR C.B.A.	
Transistor & Resistor	
QR7501	C-2
QR7503	A-8
QR7504	A-8
QR7505	A-8
Integrated Circuit	
IC6511	A-15
IC7501	C-4
IC7502	B-3
IC7503	C-7
IC7504	B-2
IC7505	C-2
Adjustment	
C7501	B-3
VR6511	B-13
VR6512	B-15
VR6513	B-15
VR7501	A-7
Connector	
P6501	A-10
P6511	A-14
P6512	B-16
P6701	E-1
P7501	D-6
P7502	D-4
P7504	B-9
P7505	B-1
P7506	A-8
PS6301	C-13

ADDRESS INFORMATION

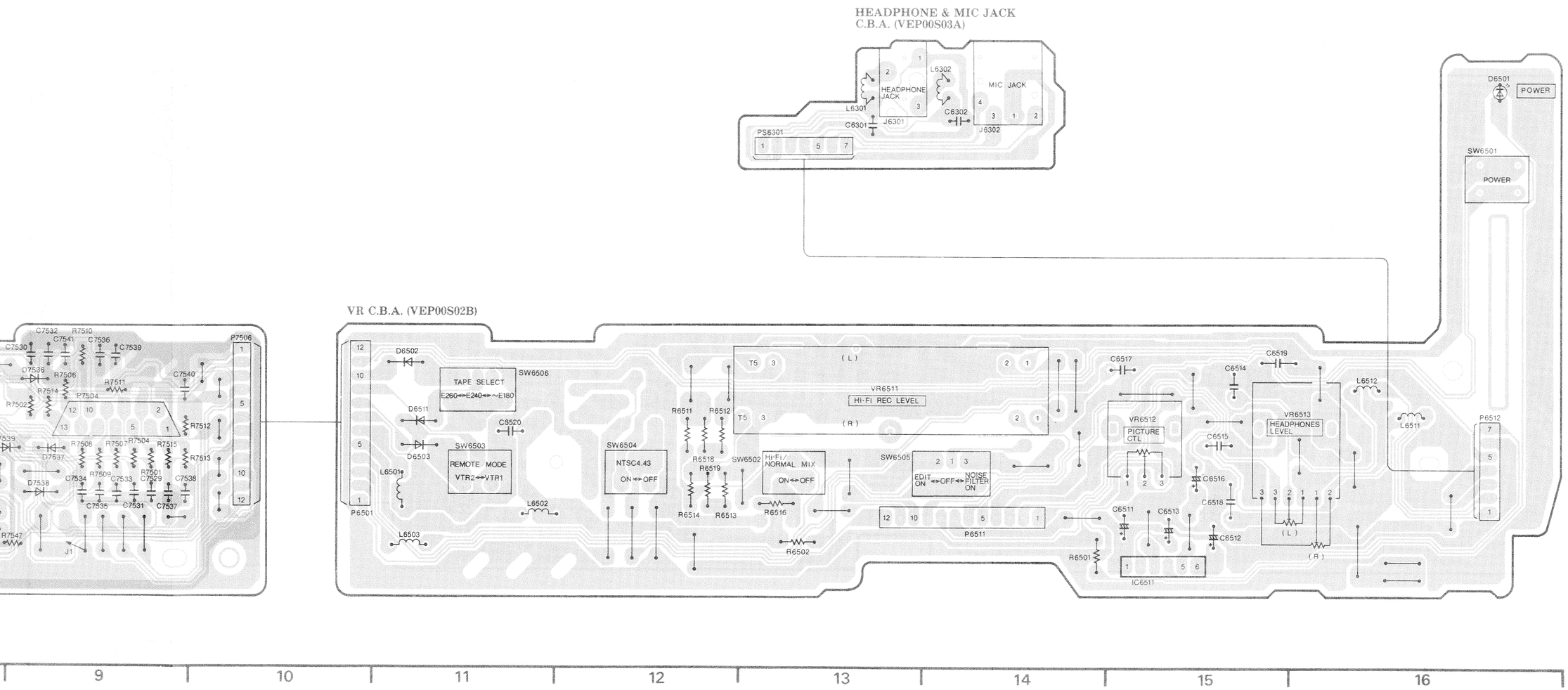

4-24. TV DEMODULATOR PACK C.B.A. (VEP07643E)

4-25. D

TV DEMODULATOR PACK C.B.A.			
Transistor		**Adjustment**	
Q703	B-4	T703	C-2
Q712	C-3	T704	C-2
Q771	B-5	VR701	B-4
Transistor & Resistor		VR702	B-4
QR701	C-2	VR741	B-3
QR702	C-2	**Connector**	
QR711	B-5	PS701	C-8
QR712	B-4	PS702	C-5
Integrated Circuit		PS703	C-4
IC701	B-2	PS704	C-2
Test Point			
TP703	C-3		
TP704	C-2		
TP706	B-1		
TP707	B-3		
TP709	B-3		

ADDRESS INFORMATION

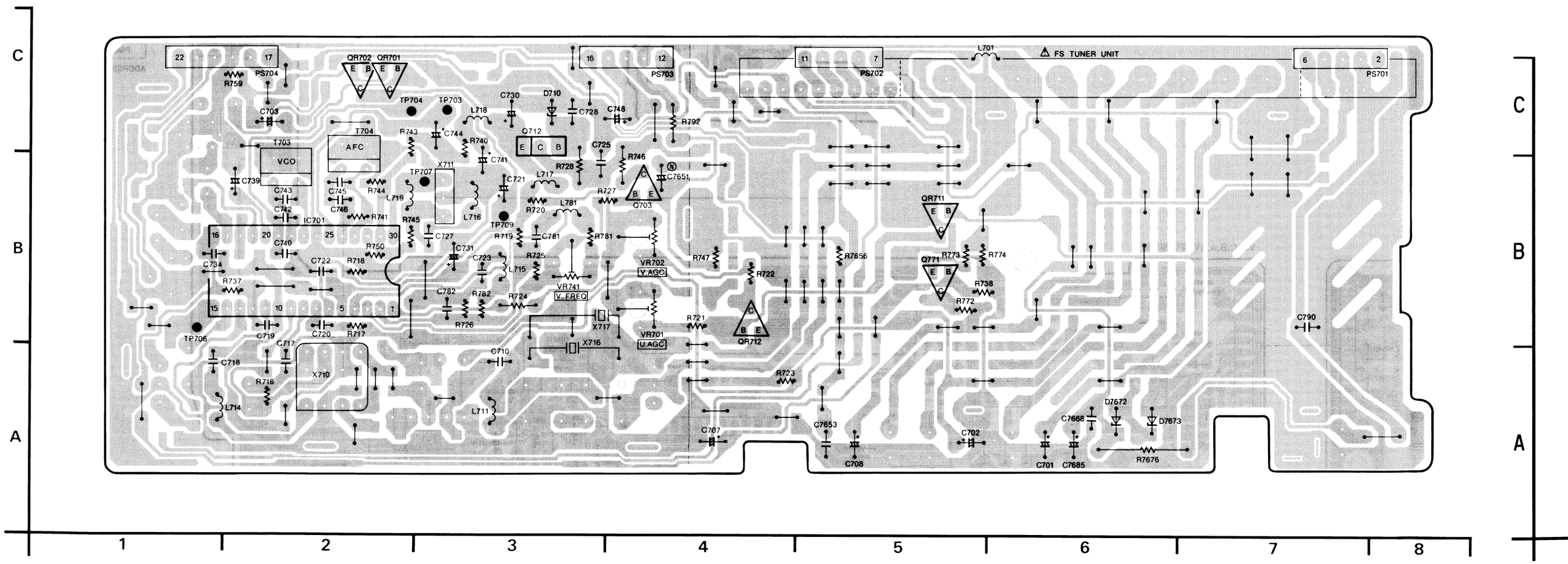

4-25. DECODER PACK C.B.A. (VEP07671C)

K C.B.A.	
tment	
3	C-2
4	C-2
01	B-4
02	B-4
41	B-3
ctor	
01	C-8
02	C-5
03	C-4
04	C-2

DECODER PACK C.B.A.			
Transistor		**Adjustment**	
Q7301	B-2	T7301	C-3
Q7304	B-2	T7302	A-2
Q7305	C-2	T7303	A-4
Q7306	A-1	T7304	C-1
Q7307	A-1	T7305	C-1
Transistor & Resistor		VR7301	A-3
QR7301	B-1	VR7326	C-4
QR7302	B-1	VR7328	C-3
QR7312	B-4	VR7340	A-4
QR7313	B-4	VR7342	A-1
QR7314	B-4	VR7344	A-3
QR7315	B-4	**Connector**	
QR7316	B-3	PS7301	A-1
Integrated Circuit		PS7302	A-3
IC7301	B-3		
IC7302	B-1		
Test Point			
TP7303	B-3		
TP7304	B-3		

ADDRESS INFORMATION

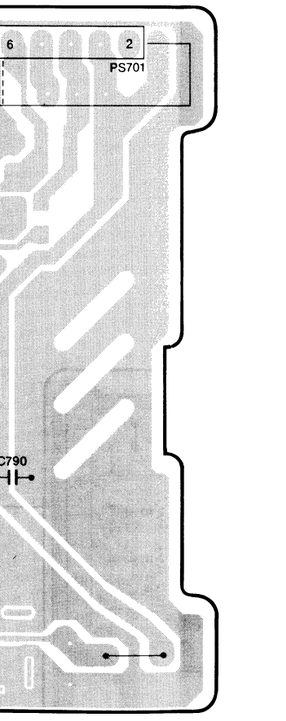

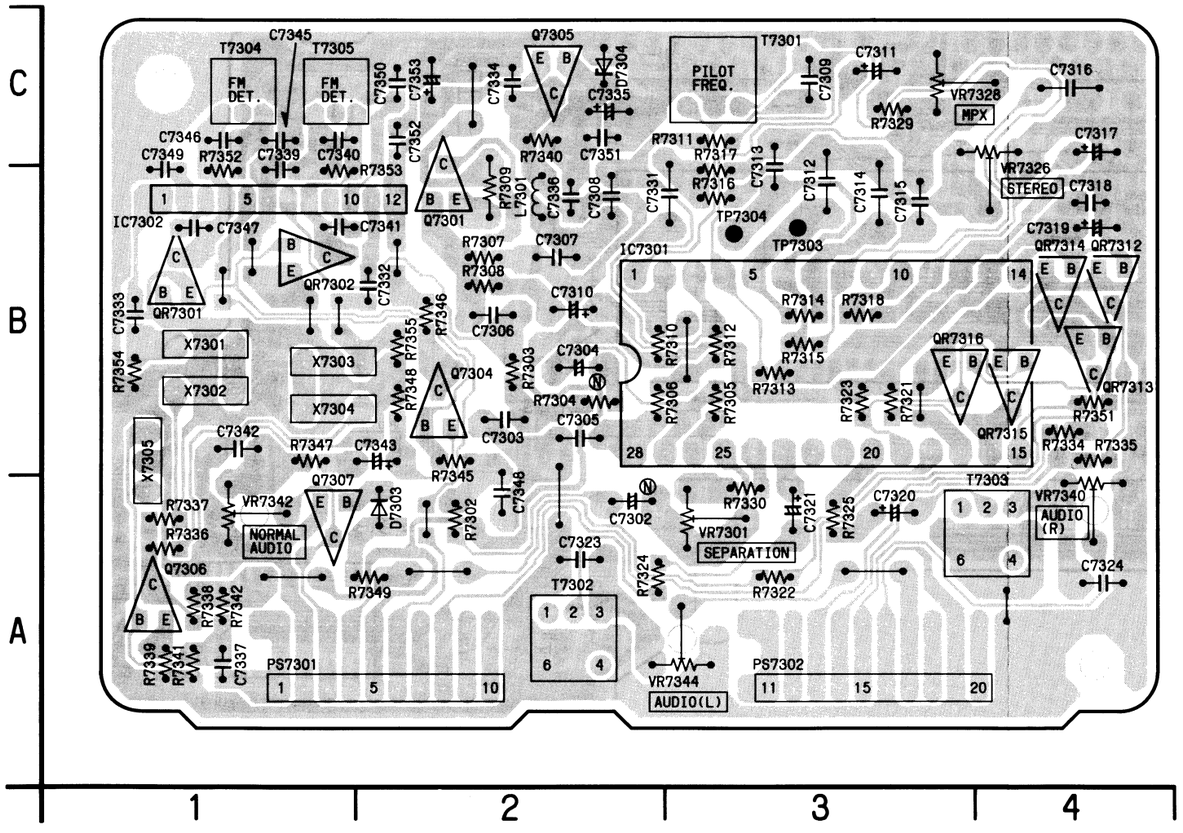

4-26. VPS PACK C.B.A. (VEP07575A)

VPS PACK C.B.A.	
Transistor & Resistor	
QR7801	B-2
QR7802	B-1
QR7851	B-2
QR7852	A-2
Integrated Circuit	
IC7851	B-2
IC7852	A-2
IC7853	B-1

ADDRESS INFORMATION

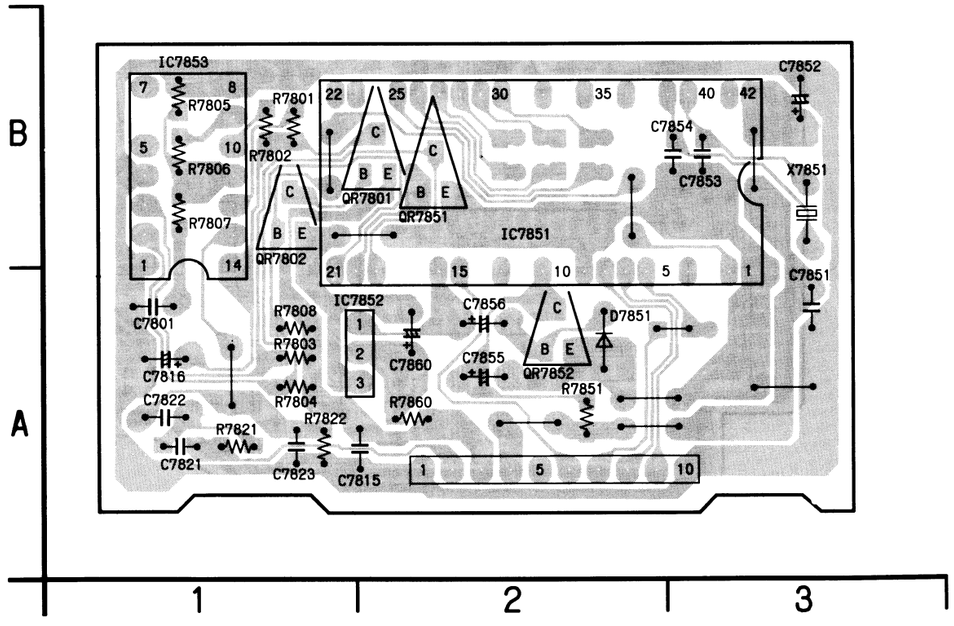

SECTION 5
EXPLODED VIEWS & PARTS LIST
5-1. EXPLODED VIEW & MECHANICAL REPLACEMENT PARTS LIST
❶ CHASSIS PARTS SECTION (1)

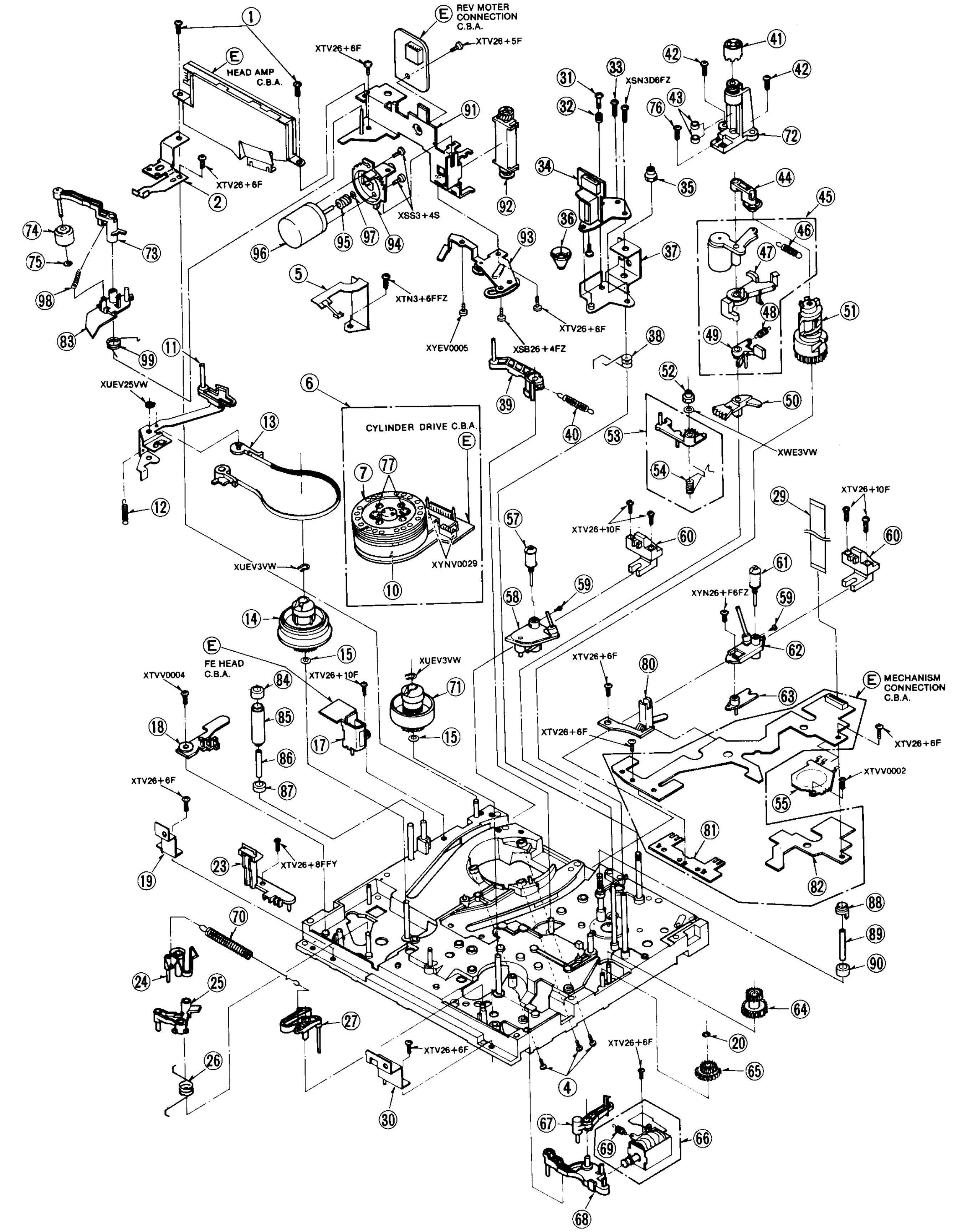

1. CHASSIS PARTS SECTION (1)

Note:1.* Be sure to make your orders of replacement parts according to this list.
2. IMPORTANT SAFETY NOTICE
Components identified with the mark <!> have the special characteristics for safety. When replacing any of these components,use only the same type.

Ref.No.		Part No.	Part Name & Description	Pcs	Remarks
1(1)		VHD0418	HEAD AMP SET SCREW	2	
2(1)		VMA7174	HEAD AMP MOUNT ANGLE	1	
4(1)		VHD0342	CYLINDER SCREW	3	
5(1)		VXA2702	EARTH PLATE UNIT	1	
6(1)		VEG0967	CYLINDER UNIT	1	<!>
7(1)		VEH0572	UPPER CYLINDER UNIT	1	
10(1)		VSC2188	CYLINDER C.B.A.SHIELD PLATE	1	
11(1)		VXL1855	TENSION ARM (1) UNIT	1	
12(1)		VMB1563	TENSION SPRING	1	
13(1)		VXZ0267	TENSION BAND UNIT	1	
14(1)		VXR0179	SUPPLY REEL TABLE UNIT	1	
15(1)		VMX1171	REEL WASHER (0.5mm)	2	
15(1)		VMX1239	REEL WASHER (0.3mm)	2	
15(1)		VMX1238	REEL WASHER (0.2mm)	2	
17(1)		VBS0038	FE HEAD	1	
18(1)		VMD1316	TENSION SPRING HOOK	1	
19(1)		VMA6895	MOUNT ANGLE (L)	1	
20(1)		VMX1079	CUT WASHER	1	
23(1)		VES0486	SAFETY SW	1	
24(1)		VXZ0259	SUPPLY MAIN BRAKE UNIT	1	
25(1)		VXZ0274	SUPPLY SOFT BRAKE(1)UNIT	1	
26(1)		VMB1564	SUPPLY SOFT BRAKE SPRING	1	
27(1)		VXZ0262	TAKE UP MAIN BRAKE UNIT	1	
29(1)		VWJ0615	FLEXIBLE CARD(15P)	1	P6001-P1504
30(1)		VMA6896	MOUNT ANGLE (R)	1	
31(1)		VHD0322	ADJUST SCREW	1	
32(1)		VMB1251	ADJUST SPRING	1	
33(1)		VHD0089B	AZIMUTH ADJUST SCREW	1	
34(1)		VED0082	A/C HEAD (1) UNIT	1	
35(1)		VHN0063	M4 NYLON NUT	1	
36(1)		VHN0110	ADJUST NUT	1	
37(1)		VMA7831	HEAD BASE	1	
38(1)		VMB1567	A/C HEAD SPRING	1	
39(1)		VXL1857	SUB LOADING ARM (1) UNIT	1	
40(1)		VMB1566	SUB POST SPRING	1	
41(1)		VXQ0006	THRUST SCREW UNIT	1	
42(1)		VHD0317	HOUSING SCREW	2	
43(1)		VMX1033	OIL SEAL	2	
44(1)		VMX1353	PINCH CAM CAP	1	
45(1)		VXL1858	PRESSURE ROLLER UNIT	1	
46(1)		VMB1941	PIN PRESSURE SPRING	1	
47(1)		VML2232	PINCH PRESSURE ARM	1	
48(1)		VMB1569	PINCH PRESSURE ARM RELEASE SPRING	1	
49(1)		VML1874	PINCH LIFT ARM	1	
50(1)		VDG0597	P5 PULL OUT SECTOR GEAR	1	
51(1)		VDG0421	PINCH CAM	1	
52(1)		VHD0045	M3 NYLON NUT	1	
53(1)		VXL2027	P5 UNIT	1	
54(1)		VMB2718	P5 SPRING	1	
55(1)		VSS0175	MODE SW	1	
57(1)		VXP0863	ROLLER POST (S) UNIT	1	
58(1)		VXA4106	INCLIND BASE (S)(1)UNIT	1	
59(1)		VHD0133	ROLLER POST SCREW	2	
60(1)		VMD0910	POST STOPPER	2	
61(1)		VXP1094	ROLLER POST (T) UNIT	1	
62(1)		VXA3876	INCLIND BASE(T)(1)UNIT	1	
63(1)		VXA2687	INCLIND ADJUST PLATE UNIT	1	
64(1)		VDG0483	PINCH SPEED DOWN GEAR	1	
65(1)		VDG0664	CONNECTION GEAR	1	
66(1)		VXA3735	SOLENOID UNIT	1	
67(1)		VXA2692	KICK ROD UNIT	1	
68(1)		VML1849	SOLENOID LEVER	1	
69(1)		VMB1553	KICK ROD SPRING	1	
70(1)		VMB2012	MAIN BRAKE SPRING	1	
71(1)		VXR0176	TAKE UP REEL TABLE UNIT	1	
72(1)		VXD0101	HOUSING UNIT	1	
73(1)		VXL2086	CLEANNER ARM (2) UNIT	1	
74(1)		VXP1341	CLEANNER ROLLER UNIT	1	
75(1)		VMX1061	SNAP WASHER (A)	1	
76(1)		VHD0374	HOUSING SCREW	1	
77(1)		VHD0553	UPPER CYLINDER SCREW	2	
80(1)		VXA3520	LED HOLDER UNIT	1	
81(1)		VMA7829	REINFORCEMENT PLATE (F)	1	
82(1)		VMA7830	REINFORCEMENT PLATE (R)	1	
83(1)		VML2510	CLEANNER ARM (B)	1	
84(1)		VMX1088	SUPPLY UPPER LIMITER	1	
85(1)		VDP1072	SUPPLY ROLLER	1	
86(1)		VMX1581	P1 COLLAR	1	
87(1)		VMX1533	SUPPLY LOWER LIMITER	1	
88(1)		VMX1544	P4 UPPER LIMITER	1	
89(1)		VMX1568	P4 SLEEVE	1	
90(1)		VMX1534	P4 LOWER LIMITER	1	
91(1)		VXA4317	MOTOR MOUNT PLATE UNIT	1	
92(1)		VXA3517	WORM WHEEL BEARING UNIT	1	
93(1)		VXA4315	TENSION PULLEY BASE (A) UNIT	1	
94(1)		VXA3564	REEL MOTOR BRACKET UNIT	1	
95(1)		VXP1208	WORM GEAR UNIT	1	
96(1)		VEM0320	REV MOTOR	1	<!>
97(1)		VMX1734	WORM WASHER	1	
98(1)		VMB2263	CLEANNER ARM SPRING (A)	1	
99(1)		VMB2264	CLEANNER ARM SPRING (B)	1	

SECTION 5

❷ CHASSIS PARTS SECTION (2)

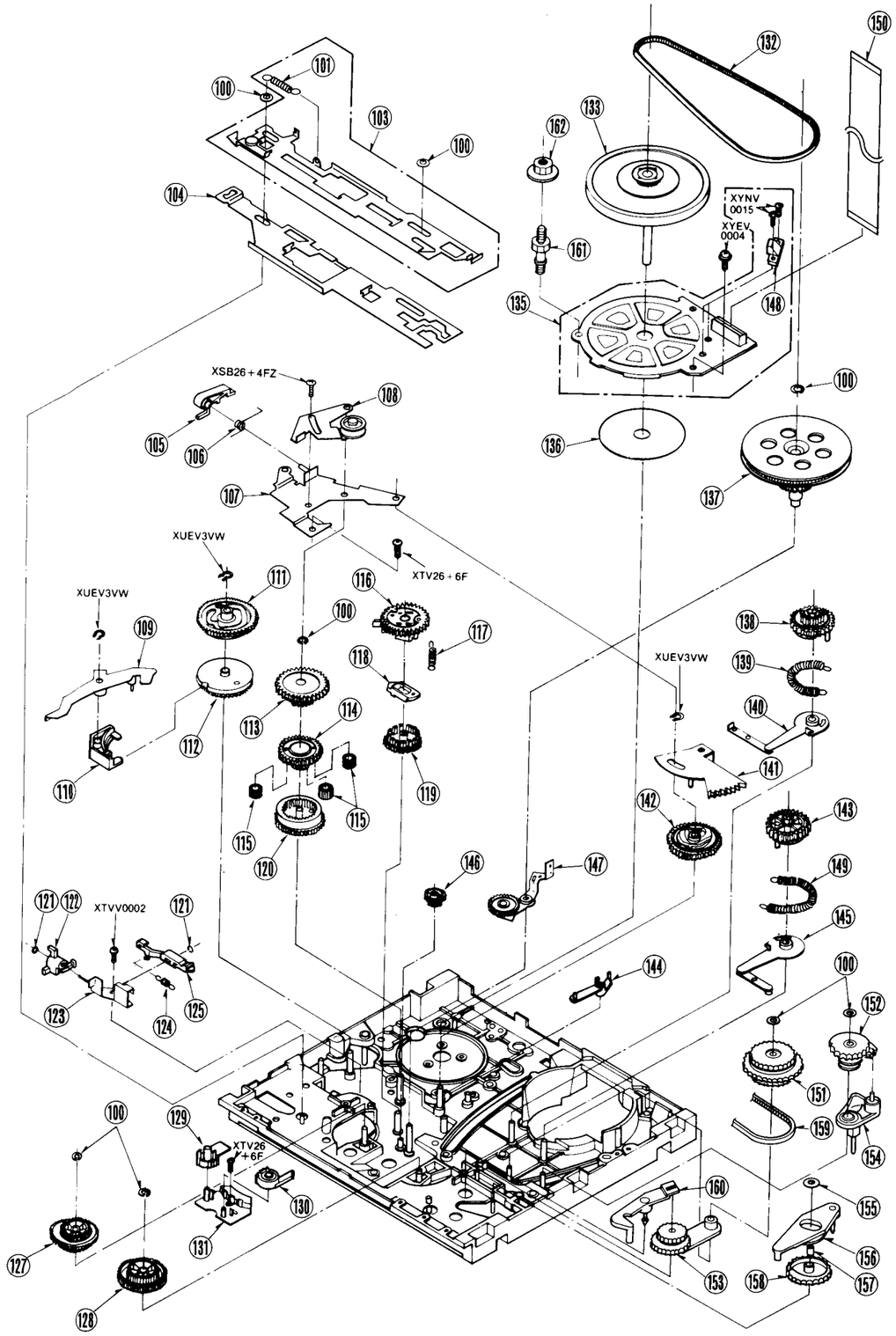

2. CHASSIS PARTS SECTION (2)

Note:1.* Be sure to make your orders of replacement parts according to this list.
2.IMPORTANT SAFETY NOTICE
Components identified with the mark <!> have the special characteristics for safety. When replacing any of these components,use only the same type.

Ref.No.		Part No.	Part Name & Description	Pcs	Remarks
100(2)		VMX1079	CUT WASHER	8	
101(2)		VMB1883	SUB LEVER SPRING	1	
103(2)		VXA3510	SUB LEVER UNIT	1	
104(2)		VMM0204	MAIN LEVER	1	
105(2)		VXL2088	SS BRAKE ARM UNIT	1	
106(2)		VMB1588	SS BRAKE SPRING	1	
107(2)		VXA3512	SS BRAKE BASE (1) UNIT	1	
108(2)		VXA3516	TENSION ROLLER UNIT	1	
109(2)		VXL1632	CAM FOLLOWER ARM UNIT	1	
110(2)		VML1861	DETENT ARM	1	
111(2)		VDG0574	MAIN CAM GEAR	1	
112(2)		VDG0343	SUB CAM GEAR	1	
113(2)		VDG0348	CENTRE GEAR	1	
114(2)		VDG0422	RETAINER GEAR	1	
115(2)		VDG0345	PLANET GEAR	3	
116(2)		VDG0547	CLUTCH DISK	1	
117(2)		VMB1558	CLUTCH SPRING	1	
118(2)		VDG0350	LOCK SLIDE GEAR	1	
119(2)		VDG0335	DRIVE DISK	1	
120(2)		VDG0342	RING GEAR	1	
121(2)		VMX0967	CUT WASHER	2	
122(2)		VML1859	CHANGE LEVER	1	
123(2)		VXA2672	RELEASE LEVER (1) UNIT	1	
124(2)		VMB1557	RELEASE SPRING	1	
125(2)		VML1860	RELEASE LEVER	1	
127(2)		VXP1031	TAKE UP REEL GEAR UNIT	1	
128(2)		VXP0981	SUPPLY REEL GEAR UNIT	1	
129(2)		VML1858	RETURN LEVER (R)	1	
130(2)		VML1857	RETURN LEVER (L)	1	
131(2)		VMD0913	STOPPER BASE	1	
132(2)		VDV0169	TIMING BELT	1	
133(2)		VXP1113	ROTOR UNIT	1	
135(2)		VEK4097	STATOR UNIT	1	<!>
136(2)		VMA6847	SUB PLATE	1	
137(2)		VXP1050	CENTRE PULLEY UNIT	1	
138(2)		VDG0564	LOADING GEAR (T)	1	
139(2)		VMB1555	LOADING SPRING (T)	1	
140(2)		VXL1489	LOADING ARM (T)(1) UNIT	1	
141(2)		VXA3515	SECTOR GEAR UNIT	1	
142(2)		VDG0516	LOADING CAM GEAR	1	
143(2)		VDG0419	LOADING GEAR (S)	1	
144(2)		VML2266	PLAY CONTROL ARM	1	
145(2)		VXL1487	LOADING ARM (S)(1) UNIT	1	
146(2)		VDG0546	INTERMEDIATE GEAR	1	
147(2)		VXL1861	PLAY ARM UNIT	1	
148(2)		VBK0048	FG HEAD	1	
149(2)		VMB1746	LOADING SPRING(S)	1	
150(2)		VWJ0597	FLEXIBLE CARD (15P)	1	P2001-CAP STATOR UNIT
151(2)		VXP1029	REVIEW CLUTCH UNIT	1	
152(2)		VXP1030	TENSION RELEASE CLUTCH UNIT	1	
153(2)		VXL1851	REVIEW ARM UNIT	1	
154(2)		VML2197	TENSION RELEASE LEVER	1	
155(2)		VMX1536	CUT WASHER	1	
156(2)		VML2233	SUB CAM FOLLOWER	1	
157(2)		VMX1495	RUBBER STOPPER	1	
158(2)		VDG0517	SUB LEVER CAM	1	
159(2)		VDV0199	REVIEW CLUTCH TIMING BELT	1	
160(2)		VML2200	REVIEW CONTROL LEVER	1	
161(2)		VHD0431	STATOR SPACER SCREW	1	
162(2)		VHN0102	STATOR NUT	1	

3. CASSETTE UP MECHANISM SECTION

Note:1.* Be sure to make your orders of replacement parts according to this list.
2.IMPORTANT SAFETY NOTICE
Components identified with the mark <!> have the special characteristics for safety. When replacing any of these components,use only the same type.

Ref.No.		Part No.	Part Name & Description	Pcs	Remarks
201(3)		VMA7223	TOP PLATE	1	
202(3)		VXA3840	CASSETTE HOLDER UNIT	1	
217(3)		VMD1890	SIDE PLATE (L)	1	
218(3)		VML1880	OPENER LEVER	1	
219(3)		VXA4076	SIDE PLATE (R) UNIT	1	
221(3)		VXA4642	SLIDE SW UNIT	1	
229(3)		VXP0987	MAIN SHAFT UNIT	1	
230(3)		VMB1836	SUB WIPER SPRING (L)	1	
231(3)		VML1878	SUB WIPER ARM (L)	1	
232(3)		VML1879	SUB WIPER ARM (R)	1	
233(3)		VMB1837	SUB WIPER SPRING (R)	1	
234(3)		VMA6900	CASSETTE GUIDE	1	
235(3)		VKF1212	BLINDER PANEL	1	
236(3)		VMB1258	BLINDER SPRING	1	
240(3)		VMA7224	CASSETTE HOLDER ANGLE	1	

❸ CASSETTE UP MECHANISM SECTION

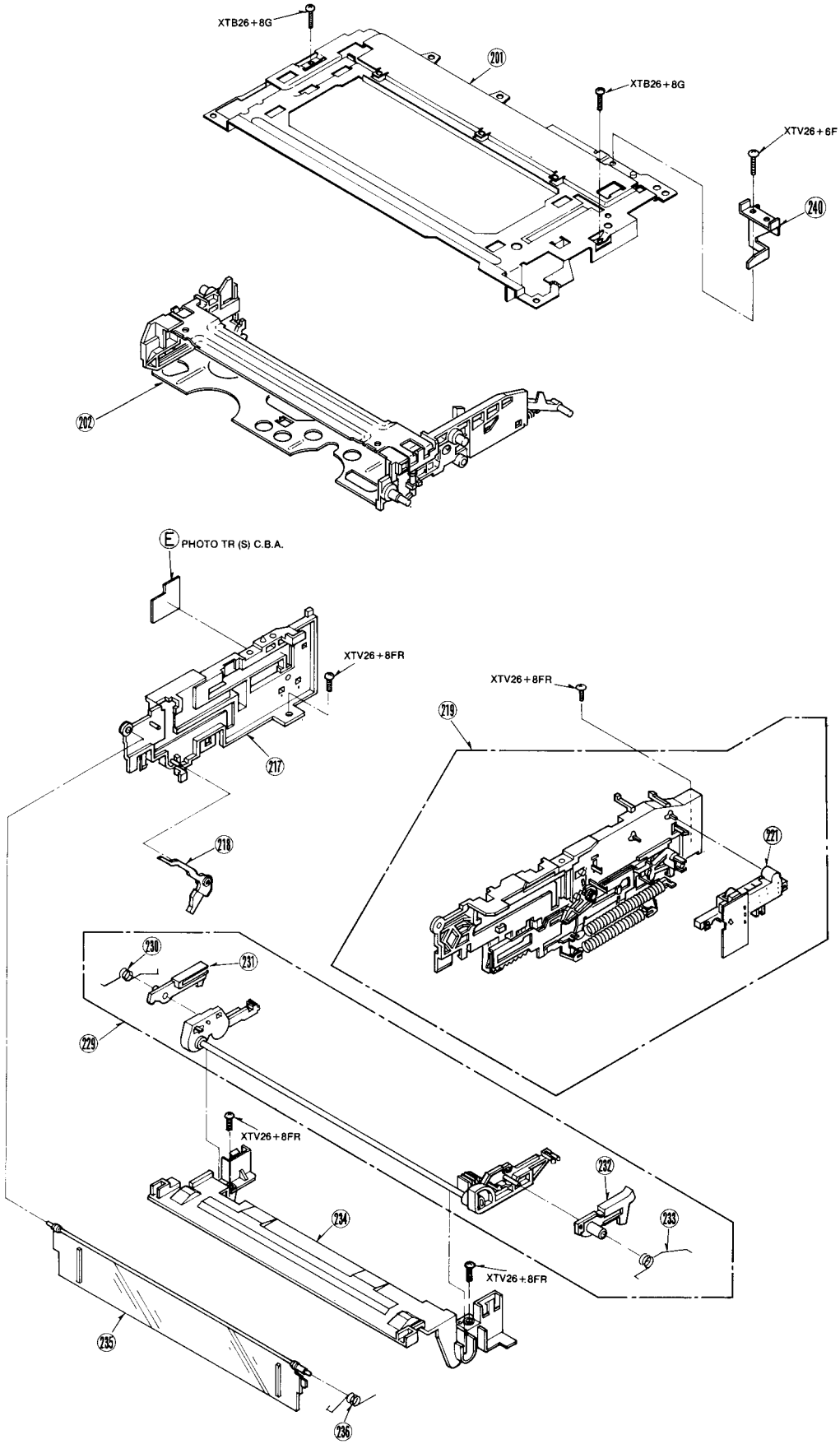

❹ CASING PARTS SECTION

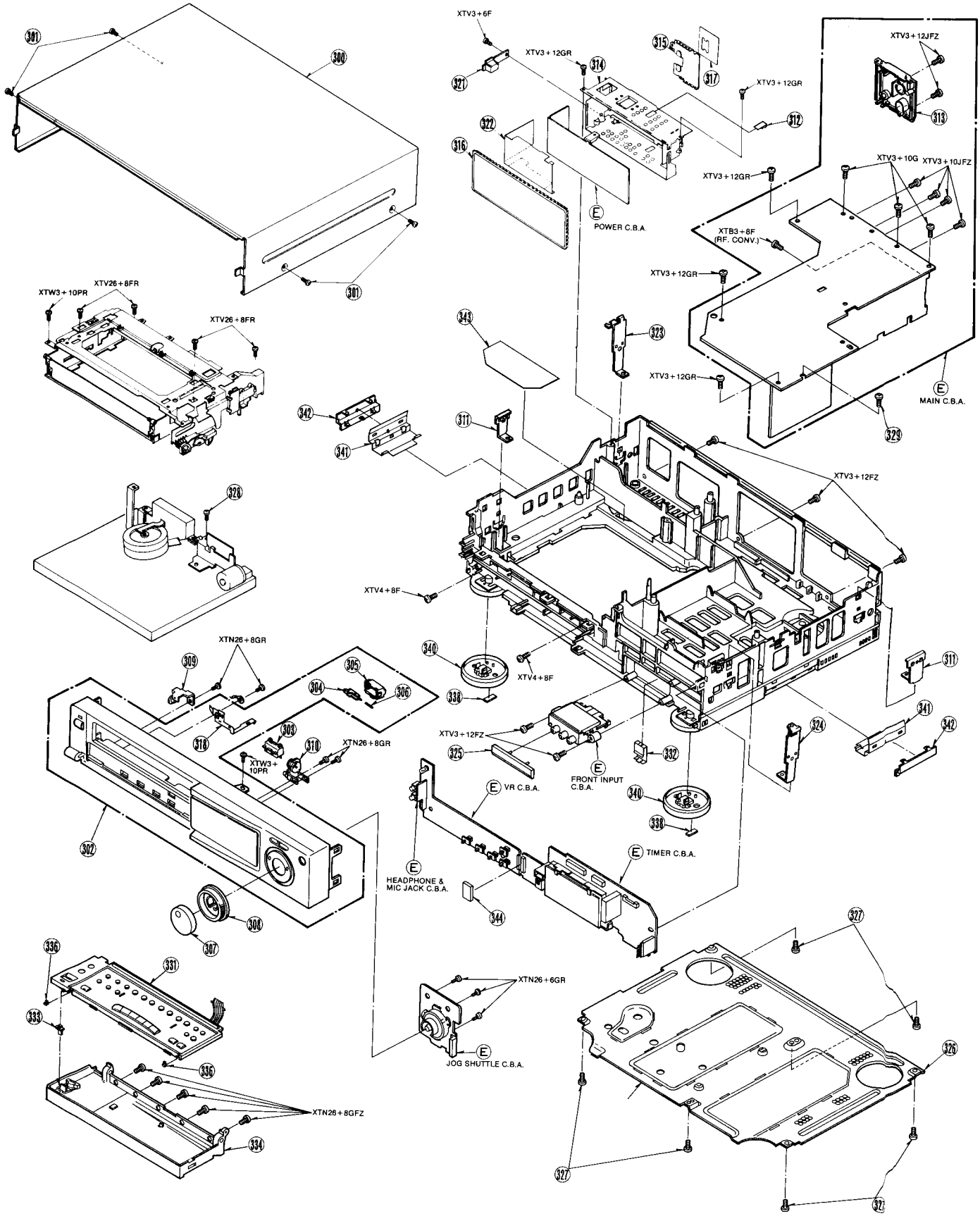

4. CASING PARTS SECTION

Note: 1.* Be sure to make your orders of replacement parts according to this list.
2. IMPORTANT SAFETY NOTICE
Components identified with the mark <!> have the special characteristics for safety. When replacing any of these components, use only the same type.

Ref.No.		Part No.	Part Name & Description	Pcs	Remarks
300(4)		VGM0697	TOP PANEL	1	
301(4)		VHD0165	TOP PANEL SCREW	4	
302(4)		VYP4122	FRONT PANEL (2) UNIT	1	
303(4)		VGQ2807	FPC HOLDER	1	
304(4)		VGU4498	DOOR LOCK LEVER	1	
305(4)		VGU4829	LOCK LEVER HOLDER	1	
306(4)		VMB1963	LOCK LEVER SPRING	1	
307(4)		VXU1091	JOG KNOB UNIT	1	
308(4)		VGU5854	SHUTTLE KNOB	1	
309(4)		VXA4760	ANGLE (L) UNIT	1	
310(4)		VXA4761	ANGLE (R) UNIT	1	
311(4)		VMP3321	TOP HOLDER ANGLE (A)	2	
312(4)		VMC0357	Tr. HOLDER SPRING	1	
313(4)		VJH0617	RF & ANT. BOARD	1	
314(4)		VXA4756	POWER SHIELD PLATE (MAIN)	1	
315(4)		VSC3110	POWER SHIELD PLATE (TOP)	1	
316(4)		VSC2237	POWER SHIELD PLATE (BOTTOM)	1	
317(4)		VGH2721	POWER NAME PLATE	1	
318(4)		VMC0866	EARTH SPRING	1	
321(4)		VMP1734	SCREW STOPPER ANGLE	1	
322(4)		VMZ1950	BARRIER	1	<!>
323(4)		VMP3322	TOP HOLDER ANGLE (B)	1	
324(4)		VMP3356	TOP HOLDER ANGLE (C)	1	
325(4)		VKF1199	FRONT JACK COVER	1	
326(4)		VKU0302	BOTTOM PLATE	1	
327(4)		VHD0059	BOTTOM PLATE SCREW	6	
328(4)		VHD0168	CHASSIS SCREW	1	
329(4)		VHD0418	MAIN SCREW	1	
331(4)		VES0680	KEY BOARD PANEL UNIT	1	
332(4)		VMC0463	FRONT JACK EARTH PLATE	1	
333(4)		VGL0524	PANEL LIGHT	1	
334(4)		VYF1851	DOOR PANEL (1) UNIT	1	
336(4)		VMT0212	CUSHION RUBBER	2	
338(4)		VKA0122	RUBBER FOOT	2	
340(4)		VKA0137	LEG	2	
341(4)		VMP3438	FTZ ANGLE	2	
342(4)		VGQ2756	FTZ ANGLE HOLDER	2	
343(4)		VMZ2008	FTZ BARRIER	1	
344(4)		VJS3267A012W	BRIDGE CONNECTOR	1	P7506-P6501

❺ PACKING PARTS SECTION

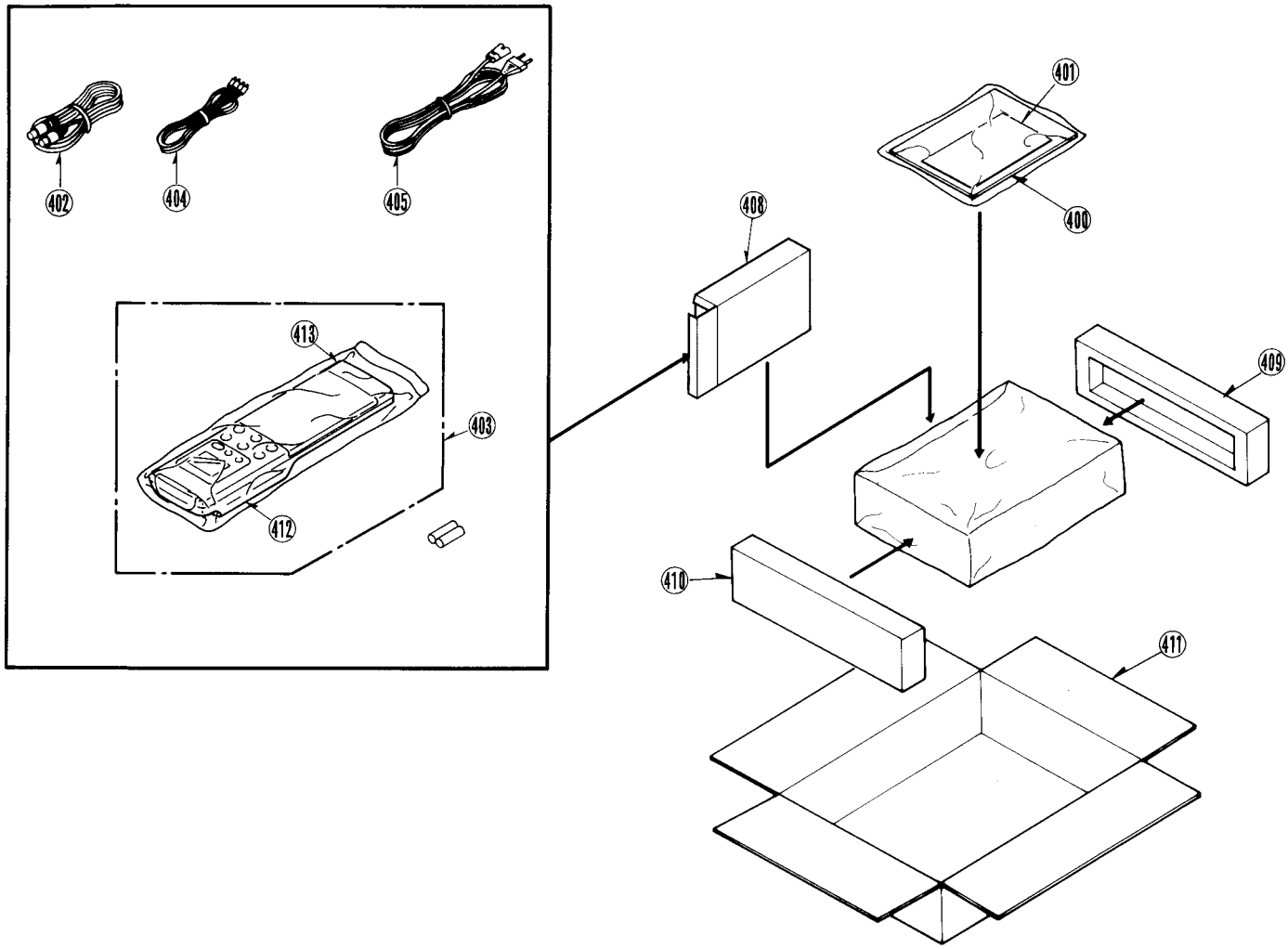

5. PACKING PARTS SECTION

Note: 1. * Be sure to make your orders of replacement parts according to this list.
2. IMPORTANT SAFETY NOTICE
Components identified with the mark <!> have the special characteristics for safety. When replacing any of these components, use only the same type.

Ref.No.		Part No.	Part Name & Description	Pcs	Remarks
400(5)		VQT4590	OPERATING INSTRUCTIONS	1	<!>
			(ENGLISH/GERMAN)		
400(5)		VQT4591	OPERATING INSTRUCTIONS	1	<!>
			(FRENCH/DUTCH)		
400(5)		VQT4592	OPERATING INSTRUCTIONS	1	<!>
			(ITALIAN)		
401(5)		VQC1859	PROGRAMME SHEET	1	
402(5)		VJA0710	DIN RF CABLE	1	
403(5)		VEQ1389	REMOTE CONTROLLER UNIT	1	
			(BUILD IN DIGITAL SCANNER)		
404(5)		VJA0231	AUDIO CABLE	1	
405(5)		VJA0665	AC CORD	1	<!>
408(5)		VPK0834	ACCESSORIES PACKING	1	
409(5)		VPN3396	CUSHION (R)	1	
410(5)		VPN3395	CUSHION (L)	1	
411(5)		VPG6386	PACKING	1	
412(5)		VKF1658	BATTERY COVER	1	
413(5)		VGQ2399	SENSOR CAP	1	

Ref.No.		Part No.	Part Name & Description	Pcs	Remarks
			SERVICING FIXTURES & TOOLS		
		VFJ8125H3F	VHS ALIGNMENT TAPE(PAL)	1	
		VFK0335	RETAINING RING REMOVER	1	
			(3mm/4mm)		
		VFK0387	TENSION POST ADJUSTMENT	1	
			PLATE		
		VFK0191	POST ADJUSTMENT PLATE	1	
		VFK0190	REEL TABLE HEIGHIT GAUGE	1	
		VFK0328	H-POSITION ADJUSTMENT	1	
			SCREWDRIVER		
		VFK0329	POST ADJUSTMENT SCREWDRIVER	1	
		VFK62	FAN TYPE TENSION GAUGE	1	
		VFK0326	HEX WRENCH SET	1	
		VFK0132	BACK TENSION METER	1	
		VFK0343	CHECK LIGHT	1	
		VFK0344	HEIGHIT ADJUSTMENT FIXTURE	1	
		VFK27	HEAD CLEANING STICK	1	
		MOR265	MORLYTONE GREASE	1	
		VFK0341	UPPER CYLINDER REMOVER	1	
		VFK0680	WHITE GREASE	1	

5-2. ELECTRICAL REPLACEMENT PARTS LIST

Note: 1.* Be sure to make your orders of replacement parts according to this list.
2. IMPORTANT SAFETY NOTICE
Components identified with the mark <!> have the special characteristics for safety. When replacing any of these components, use only the same type.
3. Unless otherwise specified,
All resistors are in OHMS, K=1,000 OHMS. All capacitors are in MICROFARADS(uf), P=uuF.
4. The P.C.Board units marked width'■'show below the main assembled parts.
5. Printed circuit board assembly with mark(NLA) is no longer available after discontinuation of the product.

Ref.No.		Part No.	Part Name & Description	Pcs	Remarks
		VEP06795B	MAIN C.B.A.	1	(NLA)
					INCLUDING THE INPUT/
					OUTPUT PACK C.B.A.
					(VEP03912A),
					S-VHS P.B. PACK
					C.B.A.(VEP03920A),
					LUMINANCE &
					CHROMINANCE PACK
					C.B.A.(VEP03928A),
					Hi-Fi AUDIO PACK
					C.B.A.(VEP04361B),
					SUB SERVO PACK
					C.B.A.(VEP06796B),
					VPS PACK C.B.A.
					(VEP07575A),
					TV DEMODULATOR PACK
					C.B.A.(VEP07643E),
					DECODER PACK C.B.A.
					(VEP07671C).
		VEP03912A	INPUT/OUTPUT PACK C.B.A.	1	(NLA)
					INCLUDED IN MAIN
					C.B.A.(VEP06795B).
		VEP03920A	S-VHS P.B. PACK C.B.A.	1	(NLA)
					INCLUDED IN MAIN
					C.B.A.(VEP06795B).
		VEP03928A	LUMINANCE & CHROMINANCE	1	(NLA)
			PACK C.B.A.		INCLUDED IN MAIN
					C.B.A.(VEP06795B).
		VEP04361B	Hi-Fi AUDIO PACK C.B.A.	1	(NLA)
					INCLUDED IN MAIN
					C.B.A.(VEP06795B).
		VEP06796B	SUB SERVO PACK C.B.A.	1	(NLA)
					INCLUDED IN MAIN
					C.B.A.(VEP06795B).
		VEP07575A	VPS PACK C.B.A.	1	(NLA)
					INCLUDED IN MAIN
					C.B.A.(VEP06795B).
		VEP07643E	TV DOMODULATOR PACK C.B.A.	1	(NLA)
					INCLUDED IN MAIN
					C.B.A.(VEP06795B).
		VEP07671C	DECODER PACK C.B.A.	1	(NLA)
					INCLUDED IN MAIN
					C.B.A.(VEP06795B).
		VEP05178A	HEAD AMP C.B.A.	1	(NLA)
		VEP07674B	TIMER C.B.A.	1	(NLA)
		VEP00S02B	VR C.B.A.	1	(NLA)
		VEP00S03A	HEADPHONE & MIC JACK C.B.A.	1	(NLA)

Ref.No.		Part No.	Part Name & Description	Pcs	Remarks
		VEP00S04A	FRONT INPUT C.B.A.	1	(NLA)
		VEP00S33B	JOG SHUTTLE C.B.A.	1	(NLA)
		VEP01487A	POWER C.B.A.	1	(NLA)<!>
		VEX0117	CYLINDER DRIVE C.B.A.	1	(NLA)
		VXA3825	MECHANISM CONNECTION C.B.A.	1	(NLA)
		VEP00K88C	FE HEAD C.B.A.	1	(NLA)
		VEP00P61A	REV MOTOR CONNECTION C.B.A.	1	(NLA)
		VEK3578	PHOTO Tr. (S) C.B.A.	1	(NLA)
		-------	PHOTO Tr. (T) C.B.A.	1	(NLA)
					INCLUDED IN SLIDE SW
					UNIT.(VXA4642)
		ENC17984	RF CONVERTER	1	<!>
		ENV57884H6	TUNER	1	<!>
F1101		XBA2C16TB0	FUSE	1	<!>
	■	VEP06795B	MAIN C.B.A.		(NLA)
			CAPACITORS		
C301		ECQV1H104JZ	P.CAPACITOR 50V 0.1U	1	
C302		ECEA1CK100	E.CAPACITOR 16V 10U	1	
C303		ECUM1H104ZFN	C.CAPACITOR 50V 0.1U	1	
C304,05		ECEA1EK4R7	E.CAPACITOR 25V 4.7U	2	
C306		ECUM1H080DCN	C.CAPACITOR CH 50V 8P	1	
C307		ECUM1H270JCN	C.CAPACITOR CH 50V 27P	1	
C308		ECUM1H390JCN	C.CAPACITOR CH 50V 39P	1	
C309		ECUM1H560JCN	C.CAPACITOR CH 50V 56P	1	
C310		ECUM1H220JCN	C.CAPACITOR CH 50V 22P	1	
C312		ECUM1H561JCN	C.CAPACITOR 50V 560P	1	
C313		ECEA0JK470	E.CAPACITOR 6.3V 47U	1	
C314		ECEA1CK100	E.CAPACITOR 16V 10U	1	
C315		ECUM1H104ZFN	C.CAPACITOR 50V 0.1U	1	
C316		ECUM1H560JCN	C.CAPACITOR CH 50V 56P	1	
C317		ECEA1CK100	E.CAPACITOR 16V 10U	1	
C318		ECEA0JK220	E.CAPACITOR 6.3V 22U	1	
C319		ECEA0JK101	E.CAPACITOR 6.3V 100U	1	
C320,21		ECUM1H103ZFN	C.CAPACITOR CH 50V 0.01U	2	
C322		ECEA0JK101	E.CAPACITOR 6.3V 100U	1	
C323		ECUM1H680JCN	C.CAPACITOR CH 50V 68P	1	
C324		ECUM1H331JCN	C.CAPACITOR CH 50V 330P	1	
C325		ECEA1EKN4R7	E.CAPACITOR 25V 4.7U	1	
C701		ECEA1EK4R7	E.CAPACITOR 25V 4.7U	1	
C702		ECEA1CKS100	E.CAPACITOR 16V 10U	1	
C703		ECEA1HK2R2	E.CAPACITOR 50V 2.2U	1	
C707		ECEA1HK0R1	E.CAPACITOR 50V 0.1U	1	
C708		ECEA1CKS100	E.CAPACITOR 16V 10U	1	

Ref.No.		Part No.	Part Name & Description	Pcs	Remarks
C710		ECUM1H103ZFN	C.CAPACITOR CH 50V 0.01U	1	
C717-20		ECUM1H103ZFN	C.CAPACITOR CH 50V 0.01U	4	
C721		ECEA1HKR27K	E.CAPACITOR 50V 0.27U	1	
C722		ECUM1H103ZFN	C.CAPACITOR CH 50V 0.01U	1	
C723		ECUM1H180JCN	C.CAPACITOR CH 50V 18P	1	
C725		ECQV1H104JZ	P.CAPACITOR 50V 0.1U	1	
C727		ECUM1H080DCN	C.CAPACITOR CH 50V 80P	1	
C728		ECUM1H103ZFN	C.CAPACITOR CH 50V 0.01U	1	
C730		ECEA1CK100	E.CAPACITOR 16V 10U	1	
C731		ECEA1CKS100	E.CAPACITOR 16V 10U	1	
C734		ECUM1H103ZFN	C.CAPACITOR CH 50V 0.01U	1	
C739		ECEA1HK010	E.CAPACITOR 50V 1U	1	
C740		ECUM1H103ZFN	C.CAPACITOR CH 50V 0.01U	1	
C741		ECEA1CK100	E.CAPACITOR 16V 10U	1	
C742		ECUM1H030CCN	C.CAPACITOR CH 50V 3P	1	
C743		ECUM1H270RSN	C.CAPACITOR CH 50V 27P	1	
C744		ECEA1HKR47	E.CAPACITOR 50V 0.47U	1	
C745		ECUM1H680JPN	C.CAPACITOR CH 50V 68P	1	
C746		ECUM1H150JCN	C.CAPACITOR CH 50V 15P	1	
C748		ECEA1CK470	E.CAPACITOR 16V 47U	1	
C781		ECUM1H220JCN	C.CAPACITOR CH 50V 22P	1	
C782		ECUM1H060DCN	C.CAPACITOR CH 50V 6P	1	
C790		ECUM1H103ZFN	C.CAPACITOR CH 50V 0.01U	1	
C801,02		ECEA0JK101	E.CAPACITOR 6.3V 100U	2	
C803		ECUM1H181JCN	C.CAPACITOR CH 50V 180P	1	
C804		ECUM1H270JCN	C.CAPACITOR CH 50V 27P	1	
C805		ECUM1H470JCN	C.CAPACITOR CH 50V 47P	1	
C806		ECUM1H103ZFN	C.CAPACITOR CH 50V 0.01U	1	
C807		ECUM1H151JCN	C.CAPACITOR CH 50V 150P	1	
C808-10		ECUM1H103ZFN	C.CAPACITOR CH 50V 0.01U	3	
C811		ECUM1H560JCN	C.CAPACITOR CH 50V 56P	1	
C812		ECUM1H103ZFN	C.CAPACITOR CH 50V 0.01U	1	
C813		ECUM1H560JCN	C.CAPACITOR CH 50V 56P	1	
C814		ECUM1H103ZFN	C.CAPACITOR CH 50V 0.01U	1	
C815		ECUM1H470JCN	C.CAPACITOR CH 50V 47P	1	
C816,17		ECUM1H103ZFN	C.CAPACITOR CH 50V 0.01U	2	
C819-22		ECUM1H103ZFN	C.CAPACITOR CH 50V 0.01U	4	
C823		ECEA0JK101	E.CAPACITOR 6.3V 100U	1	
C824		ECUM1H103ZFN	C.CAPACITOR CH 50V 0.01U	1	
C825		ECUM1H470JCN	C.CAPACITOR CH 50V 47P	1	
C826		ECUM1H103ZFN	C.CAPACITOR CH 50V 0.01U	1	
C827		ECEA1HK0R1	E.CAPACITOR 50V 0.1U	1	
C828		ECQB1H332JH	P.CAPACITOR 50V 0.27U	1	
C829		ECUM1H331JCN	C.CAPACITOR CH 50V 330P	1	
C830		ECUM1H104ZFN	C.CAPACITOR 50V 0.1U	1	
C831		ECUM1H681JCN	C.CAPACITOR 50V 680P	1	
C832		ECUM1H103ZFN	C.CAPACITOR CH 50V 0.01U	1	
C834,35		ECUM1H121JCN	C.CAPACITOR CH 50V 120P	2	
C836,37		ECUM1H104ZFN	C.CAPACITOR 50V 0.1U	2	
C838		ECUM1H100DCN	C.CAPACITOR CH 50V 10P	1	
C839		ECUM1H102KBN	C.CAPACITOR CH 50V 1000P	1	
C840		ECEA0JK101	E.CAPACITOR 6.3V 100U	1	
C841		ECEA1HK4R7	E.CAPACITOR 50V 4.7U	1	
C842		ECUM1H123KBN	C.CAPACITOR 50V 0.012U	1	
C843,44		ECUM1H103ZFN	C.CAPACITOR CH 50V 0.01U	2	
C1002,03		ECUM1H103ZFN	C.CAPACITOR CH 50V 0.01U	2	
C1004		ECEA1CK101	E.CAPACITOR 16V 100U	1	
C1006		ECEA1EK470	E.CAPACITOR 25V 47U	1	
C1007		ECEA1AK330	E.CAPACITOR 10V 33U	1	
C1008		ECEA1CK330	E.CAPACITOR 16V 33U	1	
C1009		ECEA0JK470	E.CAPACITOR 6.3V 47U	1	
C1010		ECEA1EK4R7	E.CAPACITOR 25V 4.7U	1	
C1011		ECUM1H104ZFN	C.CAPACITOR 50V 0.1U	1	
C1701		ECKD2H471KB	E.CAPACITOR 500V 470P	1	
C1702		ECA1CM101	E.CAPACITOR 16V 100U	1	
C1703		ECUM1H103ZFN	C.CAPACITOR CH 50V 0.01U	1	
C1704		ECEA1CK101	E.CAPACITOR 16V 100U	1	
C1705		ECUM1C105ZFN	C.CAPACITOR 16V 1U	1	
C1706		ECEA1VU100	E.CAPACITOR 35V 10U	1	
C1707		ECQB1H103JH	P.CAPACITOR 50V 0.01U	1	
C1708		ECA1CM221	E.CAPACITOR 16V 220U	1	
C2001		ECEA1HK4R7	E.CAPACITOR 50V 4.7U	1	
C2002		ECEA0JK220	E.CAPACITOR 6.3V 22U	1	
C2003		ECUM1H332KBN	C.CAPACITOR CH 50V 3300P	1	
C2004		ECEA1HK3R3	E.CAPACITOR 50V 3.3U	1	

Ref.No.		Part No.	Part Name & Description	Pcs	Remarks
C2005		ECEA1CK100	E.CAPACITOR 16V 10U	1	
C2006		ECUM1H471JCN	C.CAPACITOR 50V 470P	1	
C2007		ECEA0JK470	E.CAPACITOR 6.3V 47U	1	
C2008		ECEA0JK101	E.CAPACITOR 6.3V 100U	1	
C2009		VCYE1C104MR1	S.CAPACITOR 16V 0.1U	1	
C2010		ECEA0JK221	E.CAPACITOR 6.3V 220U	1	
C2011		ECUM1H222KBN	C.CAPACITOR CH 50V 2200P	1	
C2012		ECQB1H222KH	P.CAPACITOR 50V 2200P	1	
C2013		ECEA1HKN3R3	E.CAPACITOR 50V 3.3U	1	
C2014		ECEA1HK3R3	E.CAPACITOR 50V 3.3U	1	
C2015		ECEA1HKR47	E.CAPACITOR 50V 0.47U	1	
C2016		ECUM1H472KBN	C.CAPACITOR CH 50V 4700P	1	
C2017		ECQV1H184JZ	P.CAPACITOR 50V 0.18U	1	
C2018		ECEA0JK470	E.CAPACITOR 6.3V 47U	1	
C2019		ECQV1H683JZ	P.CAPACITOR 50V 0.068U	1	
C2020		ECUM1H103ZFN	C.CAPACITOR CH 50V 0.01U	1	
C2021		ECEA1AK470	E.CAPACITOR 10V 47U	1	
C2022		ECUM1E223KBN	C.CAPACITOR CH 25V 0.022U	1	
C2023		ECEA1CK470	E.CAPACITOR 16V 47U	1	
C2024		ECEA0JK220	E.CAPACITOR 6.3V 22U	1	
C2025		ECUM1H472KBN	C.CAPACITOR CH 50V 4700P	1	
C2026		ECUM1H101JCN	C.CAPACITOR CH 50V 100P	1	
C2029		ECUM1H392KBN	C.CAPACITOR CH 50V 3900P	1	
C2501		ECEA1CK101	E.CAPACITOR 16V 100U	1	
C2502		ECA0JM221	E.CAPACITOR 6.3V 220U	1	
C2503,04		ECUM1H333KBN	C.CAPACITOR CH 50V 0.033U	2	
C2505		ECEA1CU470	E.CAPACITOR 16V 47U	1	
C2506-09		ECUM1H333KBN	C.CAPACITOR CH 50V 0.033U	4	
C2510-12		ECEA1HK2R2	E.CAPACITOR 50V 2.2U	3	
C2513,14		ECUM1C105ZFN	C.CAPACITOR 16V 1U	2	
C2515		ECEA0JK470	E.CAPACITOR 6.3V 47U	1	
C2516		ECEA1HK4R7	E.CAPACITOR 50V 4.7U	1	
C2517		ECUM1H101JCN	C.CAPACITOR CH 50V 100P	1	
C2518		ECEA1HKNR47	E.CAPACITOR 50V 0.47U	1	
C2519		ECUM1H101JCN	C.CAPACITOR CH 50V 100P	1	
C2520		ECEA1HKNR47	E.CAPACITOR 50V 0.47U	1	
C2521		ECA1EM470	E.CAPACITOR 25V 47U	1	
C2522		ECUM1E104ZFN	C.CAPACITOR CH 25V 0.1U	1	
C2523		ECUM1E223KBN	C.CAPACITOR CH 25V 0.022U	1	
C2524,25		ECA1CM221	E.CAPACITOR 16V 220U	2	
C2526		ECEA0JK220	E.CAPACITOR 6.3V 22U	1	
C2527		ECUM1H102KBN	C.CAPACITOR CH 50V 1000P	1	
C2528		ECUM1E104ZFN	C.CAPACITOR CH 25V 0.1U	1	
C2529		ECUM1C224ZFN	C.CAPACITOR CH 16V 0.22U	1	
C2531		VCYD1C104MR1	S.CAPACITOR 16V 0.1U	1	
C3001		ECA0JM471	E.CAPACITOR 6.3V 470U	1	
C3003		ECEA1CK470	E.CAPACITOR 16V 47U	1	
C3005		ECUM1H103ZFN	C.CAPACITOR CH 50V 0.01U	1	
C3009		ECUM1H220JCN	C.CAPACITOR CH 50V 22P	1	
C3010		ECUM1H681JCN	C.CAPACITOR 50V 680P	1	
C3011		ECUM1H330JCN	C.CAPACITOR CH 50V 33P	1	
C3012		ECUM1H180JCN	C.CAPACITOR CH 50V 18P	1	
C3013		ECUM1H181JCN	C.CAPACITOR CH 50V 180P	1	
C3014		ECUM1H180JCN	C.CAPACITOR CH 50V 18P	1	
C3015		ECEA0JK470	E.CAPACITOR 6.3V 47U	1	
C3016		ECUM1H151JCN	C.CAPACITOR CH 50V 150P	1	
C3018		ECUM1H104ZFN	C.CAPACITOR 50V 0.1U	1	
C3019		ECEA0JK470	E.CAPACITOR 6.3V 47U	1	
C3020		ECUM1H560JCN	C.CAPACITOR CH 50V 56P	1	
C3021		ECUM1H080DCN	C.CAPACITOR CH 50V 8P	1	
C3022		ECUM1H103ZFN	C.CAPACITOR CH 50V 0.01U	1	
C3023		ECUM1H104ZFN	C.CAPACITOR 50V 0.1U	1	
C3024		ECUM1H103ZFN	C.CAPACITOR CH 50V 0.01U	1	
C3026		ECUM1H220JCN	C.CAPACITOR CH 50V 22P	1	
C3027		ERJ6GMZ0R00	M.RESISTOR CH 1/10W 0	1	
C3028		ECUM1H680JCN	C.CAPACITOR CH 50V 68P	1	
C3029		ECUM1H103ZFN	C.CAPACITOR CH 50V 0.01U	1	
C3031		ECUM1H181JCN	C.CAPACITOR CH 50V 180P	1	
C3032		ECEA0JK101	E.CAPACITOR 6.3V 100U	1	
C3033		ECUM1H104ZFN	C.CAPACITOR 50V 0.1U	1	
C3034		ECUM1C105ZFN	C.CAPACITOR 16V 1U	1	
C3035		ECUM1H104ZFN	C.CAPACITOR 50V 0.1U	1	
C3036		ECUM1H472KBN	C.CAPACITOR CH 50V 4700P	1	
C3037,38		ECUM1H104ZFN	C.CAPACITOR 50V 0.1U	2	
C3050		ECUM1H220JCN	C.CAPACITOR CH 50V 22P	1	

Ref.No.		Part No.	Part Name & Description	Pcs	Remarks
C3901,02		ECEAOJK101	E.CAPACITOR 6.3V 100U	2	
C3903		ECUM1H103ZFN	C.CAPACITOR CH 50V 0.01U	1	
C3904		ECEA1AK470	E.CAPACITOR 10V 47U	1	
C3905		ECEA1CK470	E.CAPACITOR 16V 47U	1	
C3906,07		ECEA1CK100	E.CAPACITOR 16V 10U	2	
C3908,09		ECUM1H332KBN	C.CAPACITOR CH 50V 3300P	2	
C3910		ECUM1H103ZFN	C.CAPACITOR CH 50V 0.01U	1	
C3911,12		ECEAOJK101	E.CAPACITOR 6.3V 100U	2	
C3913		ECUM1H104ZFN	C.CAPACITOR 50V 0.1U	1	
C3914		ECUM1H102KBN	C.CAPACITOR CH 50V 1000P	1	
C3915-17		ECEAOJK101	E.CAPACITOR 6.3V 100U	3	
C4001		ECEAOJK220	E.CAPACITOR 6.3V 22U	1	
C4002,03		ECUM1H103KBN	C.CAPACITOR CH 50V 0.01U	2	
C4005		ECUM1H103ZFN	C.CAPACITOR CH 50V 0.01U	1	
C4006		ECEAOJK220	E.CAPACITOR 6.3V 22U	1	
C4007		ECEA16M33	E.CAPACITOR 16V 33U	1	
C4008		ECQB1H103JH	P.CAPACITOR 50V 0.01U	1	
C4009		ECUM1H102KBN	C.CAPACITOR CH 50V 1000P	1	
C4010		ECQP1222JZ	P.CAPACITOR 0.0022U	1	
C4011		ECCD2H181J	C.CAPACITOR 500V 180P	1	
C4013,14		ECEA1CK100	E.CAPACITOR 16V 10U	2	
C4015		ECUM1H221JCN	C.CAPACITOR CH 50V 220P	1	
C4016		ECUM1H471JCN	C.CAPACITOR 50V 470P	1	
C4017		ECUM1H103ZFN	C.CAPACITOR CH 50V 0.01U	1	
C4018		ECEA1HK010	E.CAPACITOR 50V 1U	1	
C4019		ECEA1CK100	E.CAPACITOR 16V 10U	1	
C4020		ECUM1H103ZFN	C.CAPACITOR CH 50V 0.01U	1	
C4021		ECEAOJK330	E.CAPACITOR 6.3V 33U	1	
C4502		ECUM1C104ZFN	C.CAPACITOR CH 16V 0.1U	1	
C4503		ECUX1H152KBV	C.CAPACITOR CH 50V 1500P	1	
C4504,05		ECEA1CPZ470	E.CAPACITOR 16V 47U	2	
C4506		VCEA1CAH100	E.CAPACITOR 16V 10U	1	
C4507		ECQB1H223JA	P.CAPACITOR 50V 0.022U	1	
C4508		ECEA1EBZ4R7	E.CAPACITOR 25V 4.7U	1	
C4509		ECEA1APZ470	E.CAPACITOR 10V 47U	1	
C4510		ECQB1H103JA	P.CAPACITOR 50V 0.01U	1	
C4511		ECQB1H332JA	P.CAPACITOR 50V 3300P	1	
C4512		ECUX1H561JV	C.CAPACITOR CH 50V 560P	1	
C4513		ECUM1H681JN	C.CAPACITOR CH 50V 680P	1	
C4514		ECUM1H561JN	C.CAPACITOR CH 50V 560P	1	
C4515		VCEA1EAH4R7	E.CAPACITOR 25V 4.7U	1	
C4517		ECEA1APZ101	E.CAPACITOR 10V 100U	1	
C4518		ECUM1H104ZFN	C.CAPACITOR 50V 0.1U	1	
C4521		ECUM1C473KBV	C.CAPACITOR CH 16V 0.047U	1	
C4522		VCEA1HAH3R3	E.CAPACITOR 50V 3.3U	1	
C4528		ECUM1H104ZFN	C.CAPACITOR 50V 0.1U	1	
C4530		ECEAOJPK470	E.CAPACITOR 6.3V 47U	1	
C4533		ECEA1CPZ330	E.CAPACITOR 16V 33U	1	
C4537		ECUM1H102JCN	C.CAPACITOR CH 50V 1000P	1	
C4538		ECEA1HUR47	E.CAPACITOR 50V 0.47U	1	
C4539		ECUM1C224ZFN	C.CAPACITOR CH 16V 0.22U	1	
C4541		ECUM1H104ZFN	C.CAPACITOR 50V 0.1U	1	
C4545		ECUM1H102KBN	C.CAPACITOR CH 50V 1000P	1	
C4552		ECUM1C104ZFN	C.CAPACITOR CH 16V 0.1U	1	
C4556		VCEA1CAH100	E.CAPACITOR 16V 10U	1	
C4557		ECQB1H223JA	P.CAPACITOR 50V 0.022U	1	
C4558		ECEA1EBZ4R7	E.CAPACITOR 25V 4.7U	1	
C4559		ECEA1APZ470	E.CAPACITOR 10V 47U	1	
C4560		ECQB1H103JA	P.CAPACITOR 50V 0.01U	1	
C4561		ECQB1H332JA	P.CAPACITOR 50V 3300P	1	
C4562		ECUM1H561JN	C.CAPACITOR CH 50V 560P	1	
C4563		ECUM1H681JN	C.CAPACITOR CH 50V 680P	1	
C4564		ECUM1H561JN	C.CAPACITOR CH 50V 560P	1	
C4565		VCEA1EAH4R7	E.CAPACITOR 25V 4.7U	1	
C4567		ECEA1APZ101	E.CAPACITOR 10V 100U	1	
C4568		ECUM1H104ZFN	C.CAPACITOR 50V 0.1U	1	
C4572		VCEA1HAH3R3	E.CAPACITOR 50V 3.3U	1	
C4576		ECUM1E473KBN	C.CAPACITOR CH 25V 0.047U	1	
C4583		ECEA1CPZ330	E.CAPACITOR 16V 33U	1	
C4585,86		ECEA1APZ101	E.CAPACITOR 10V 100U	2	
C4591		ECUM1H104ZFN	C.CAPACITOR 50V 0.1U	1	
C4592		ECUX1H152KBV	C.CAPACITOR CH 50V 1500P	1	
C4604		ECUM1H182JN	C.CAPACITOR CH 50V 1800P	1	
C4606		VCEAOJAC470	E.CAPACITOR 6.3V 47U	1	
C4611		ECQB1H103JH	P.CAPACITOR 50V 0.01U	1	

Ref.No.		Part No.	Part Name & Description	Pcs	Remarks
C4613		ECUM1H471JCN	C.CAPACITOR 50V 470P	1	
C4616		ECUX1H102ZFV	C.CAPACITOR CH 50V 1000P	1	
C4617		ECEA10M22	E.CAPACITOR 10V 22U	1	
C4618		ECQB1H822JH	P.CAPACITOR 50V 8200P	1	
C4619		ECEA1APB100	E.CAPACITOR 10V 10U	1	
C4621		ECEAOJPK101	E.CAPACITOR 6.3V 100U	1	
C4629		ECQB1H103JZ	P.CAPACITOR 50V 0.01U	1	
C4636		ECUM1H471JN	C.CAPACITOR CH 50V 470P	1	
C4638		ECQB1H822JH	P.CAPACITOR 50V 8200P	1	
C4651		ECQB1H333JA	P.CAPACITOR 50V 0.033U	1	
C4652,53		ECUM1C105ZFN	C.CAPACITOR 16V 1U	2	
C4901-04		ECUM1H101JCN	C.CAPACITOR CH 50V 100P	4	
C4908-10		VCEA1CAD100	E.CAPACITOR 16V 10U	3	
C4911,12		VCEAOJAC101	E.CAPACITOR 6.3V 100U	2	
C4913		ECQB1H103JH	P.CAPACITOR 50V 0.01U	1	
C4914		ECQB1H332JH	P.CAPACITOR 50V 0.27U	1	
C4915		ECQB1H103JH	P.CAPACITOR 50V 0.01U	1	
C4916		ECQB1H332JH	P.CAPACITOR 50V 0.27U	1	
C4917		VCEA1CAD100	E.CAPACITOR 16V 10U	1	
C4918		ECQB1H103JH	P.CAPACITOR 50V 0.01U	1	
C4919		ECQB1H332JH	P.CAPACITOR 50V 0.27U	1	
C4920		ECQB1H103JH	P.CAPACITOR 50V 0.01U	1	
C4921		ECQB1H332JH	P.CAPACITOR 50V 0.27U	1	
C4922		ECQB1H103JH	P.CAPACITOR 50V 0.01U	1	
C4923,24		ECQB1H332JH	P.CAPACITOR 50V 0.27U	2	
C4925		ECQB1H103JH	P.CAPACITOR 50V 0.01U	1	
C5005		ECEA1EK3R3	E.CAPACITOR 25V 3.3U	1	
C5006		ECUM1H150JCN	C.CAPACITOR CH 50V 15P	1	
C5007-09		ECUM1H330JCN	C.CAPACITOR CH 50V 33P	3	
C5012,13		ECUM1H103ZFN	C.CAPACITOR CH 50V 0.01U	2	
C5014		ECEAOJK470	E.CAPACITOR 6.3V 47U	1	
C5015,16		ECUM1H103ZFN	C.CAPACITOR CH 50V 0.01U	2	
C6001		ECEAOJK330	E.CAPACITOR 6.3V 33U	1	
C6002		ECKF1H103ZF	C.CAPACITOR 50V 0.01U	1	
C6003,04		ECEAOJK470	E.CAPACITOR 6.3V 47U	2	
C6005		ECUM1H104ZFN	C.CAPACITOR 50V 0.1U	1	
C6006		ECQB1H392J	P.CAPACITOR 50V 3900P	1	
C6007		ECUM1H103ZFN	C.CAPACITOR CH 50V 0.01U	1	
C6010,11		ECUM1H180JCN	C.CAPACITOR CH 50V 18P	2	
C6014		ECAOJM331	E.CAPACITOR 6.3V 330U	1	
C6015		ECEAOJK470	E.CAPACITOR 6.3V 47U	1	
C6016		ECUM1H103ZFN	C.CAPACITOR CH 50V 0.01U	1	
C6017		ECA1CM222	E.CAPACITOR 16V 2200U	1	
C6018		ECUM1H103ZFN	C.CAPACITOR CH 50V 0.01U	1	
C6019		ECEAOJK220	E.CAPACITOR 6.3V 22U	1	
C6021		ECUM1H104ZFN	C.CAPACITOR 50V 0.1U	1	
C6022,23		ECUM1H271JCN	C.CAPACITOR CH 50V 270P	2	
C6024-26		ECUM1H103ZFN	C.CAPACITOR CH 50V 0.01U	3	
C6027		ECEA1HK2R2	E.CAPACITOR 50V 2.2U	1	
C6028		ECKF1H103ZF	C.CAPACITOR 50V 0.01U	1	
C6029		ECUM1H103ZFN	C.CAPACITOR CH 50V 0.01U	1	
C6104		ECAOJM221	E.CAPACITOR 6.3V 220U	1	
C6105		ECEA1CK100	E.CAPACITOR 16V 10U	1	
C6302		EECS5R5T224N	E.CAPACITOR 5.5V 0.22U	1	
C7302		ECEA1CKN100	E.CAPACITOR 16V 10U	1	
C7303		ECQV1H393JZ	P.CAPACITOR 50V 0.039U	1	
C7304		ECEA1CKN100	E.CAPACITOR 16V 10U	1	
C7305		ECQV1H473JZ	P.CAPACITOR 50V 0.047U	1	
C7306		ECQB1H102KZ	P.CAPACITOR 50V 1000P	1	
C7307		ECQB1H822KZ	P.CAPACITOR 50V 8200P	1	
C7308		ECQB1H102KZ	P.CAPACITOR 50V 1000P	1	
C7309		ECQB1H152JH	P.CAPACITOR 50V 1500P	1	
C7310		ECEA16M10	E.CAPACITOR 16V	1	
C7311		ECEA50MR47	E.CAPACITOR	1	
C7312		ECQV1H224JZ	P.CAPACITOR 50V 0.22U	1	
C7313		ECQV1H104JZ	P.CAPACITOR 50V 0.1U	1	
C7314		ECQV1H224JZ	P.CAPACITOR 50V 0.22U	1	
C7315		ECQV1H104JZ	P.CAPACITOR 50V 0.1U	1	
C7316		ECQV1H224JZ	P.CAPACITOR 50V 0.22U	1	
C7317		ECEA1CK101	E.CAPACITOR 16V 100U	1	
C7318		ECUM1H103ZFN	C.CAPACITOR CH 50V 0.01U	1	
C7319		ECEA1CK470	E.CAPACITOR 16V 47U	1	
C7320,21		ECEA1CK100	E.CAPACITOR 16V 10U	2	
C7323,24		ECQV1H393JZ	P.CAPACITOR 50V 0.039U	2	
C7331		ECQV1H474JZ	P.CAPACITOR 50V 0.47U	1	

Ref.No.		Part No.	Part Name & Description	Pcs	Remarks
C7332,33		ECUM1H102ZFN	C.CAPACITOR CH 50V 1000P	2	
C7334		ECUM1H103ZFN	C.CAPACITOR CH 50V 0.01U	1	
C7335		ECEA1CK470	E.CAPACITOR 16V 47U	1	
C7336		ECUM1H103ZFN	C.CAPACITOR CH 50V 0.01U	1	
C7337		ECUM1H680JCN	C.CAPACITOR CH 50V 68P	1	
C7339		ECUM1H103ZFN	C.CAPACITOR CH 50V 0.01U	1	
C7340		ECUM1H390JPN	C.CAPACITOR CH 50V 39P	1	
C7341		ECUM1H070DCN	C.CAPACITOR CH 50V 7P	1	
C7342		ECQV1H823JZ	P.CAPACITOR 50V 0.082U	1	
C7343		ECEA1CK100	E.CAPACITOR 16V 10U	1	
C7345		ECUM1H103ZFN	C.CAPACITOR CH 50V 0.01U	1	
C7346		ECUM1H390JPN	C.CAPACITOR CH 50V 39P	1	
C7347		ECUM1H070DCN	C.CAPACITOR CH 50V 7P	1	
C7348		ECQV1H393JZ	P.CAPACITOR 50V 0.039U	1	
C7349,50		ECUM1H221JCN	C.CAPACITOR CH 50V 220P	2	
C7351,52		ECUM1H103ZFN	C.CAPACITOR CH 50V 0.01U	2	
C7353		ECEA1CK470	E.CAPACITOR 16V 47U	1	
C7401		ECUM1H103ZFN	C.CAPACITOR CH 50V 0.01U	1	
C7402		ECEA1CK100	E.CAPACITOR 16V 10U	1	
C7405,06		ECUM1H103ZFN	C.CAPACITOR CH 50V 0.01U	2	
C7407		ECEA1CK100	E.CAPACITOR 16V 10U	1	
C7408		ECUM1H103ZFN	C.CAPACITOR CH 50V 0.01U	1	
C7412		ECEA0JK470	E.CAPACITOR 6.3V 47U	1	
C7413		ECUM1H103ZFN	C.CAPACITOR CH 50V 0.01U	1	
C7651		ECEA1CKN100	E.CAPACITOR 16V 10U	1	
C7653		ECQB1H332JH	P.CAPACITOR 50V 0.27U	1	
C7668		ECUM1H103ZFN	C.CAPACITOR CH 50V 0.01U	1	
C7685		ECEA1HK010	E.CAPACITOR 50V 1U	1	
C7801		ECQV1H104JZ	P.CAPACITOR 50V 0.1U	1	
C7815		VCYE1C104MR1	S.CAPACITOR 16V 0.1U	1	
C7816		ECEA1EK4R7	E.CAPACITOR 25V 4.7U	1	
C7821		ECUM1H151JCN	C.CAPACITOR CH 50V 150P	1	
C7822		ECQB1H333JH	P.CAPACITOR 50V 0.033U	1	
C7823		ECUM1H470JCN	C.CAPACITOR CH 50V 47P	1	
C7851		ECQV1H104JZ	P.CAPACITOR 50V 0.1U	1	
C7852		ECEA1CK101	E.CAPACITOR 16V 100U	1	
C7853,54		ECUM1H330JCN	C.CAPACITOR CH 50V 33P	2	
C7855,56		ECEA1HK010	E.CAPACITOR 50V 1U	2	
C7860		ECEA0JK101	E.CAPACITOR 6.3V 100U	1	
			DIODES		
D301		1SS254	DIODE	1	
D303		MA723	DIODE	1	
D710		MA3100L	DIODE	1	
D801-03		1SS254	DIODE	3	
D805,06		1SS254	DIODE	2	
D1005		1SS254	DIODE	1	
D1006		SV03YS	DIODE	1	
D1007		AK04	DIODE	1	
D1701		SB05-05CP	DIODE	1	
D1702		MA4300H	DIODE	1	
D1703		MA185	DIODE	1	
D2003		1SS254	DIODE	1	
D2503-10		1SS254	DIODE	8	
D2511		AK04	DIODE	1	
D2512		MA723VT	DIODE	1	
D2513		1SS254	DIODE	1	
D3003		1SS254	DIODE	1	
D3004		M1MA151WA	DIODE	1	
D3005		1SS254	DIODE	1	
D3901		MA4056M	DIODE	1	
D3902		1SS254	DIODE	1	
D3903		M1MA151WK	DIODE	1	
D3904,05		MA151K	DIODE	2	
D4001		M1MA151WK	DIODE	1	
D4002-04		1SS254	DIODE	3	
D4501,02		MA151K	DIODE	2	
D4503		MA151K	DIODE	1	
D4504		MA151K	DIODE	1	
D4602		MA151K	DIODE	1	
D6002-04		MA723VT	DIODE	3	
D6007		ERA15-01	DIODE	1	
D6008		AK04	DIODE	1	
D6009-11		1SS254	DIODE	3	

Ref.No.		Part No.	Part Name & Description	Pcs	Remarks
D6012		M1MA151WK	DIODE	1	
D6101-10		1SS254	DIODE	10	
D6112		1SS254	DIODE	1	
D6113,14		SV03YS	DIODE	2	
D7303		MA28WA	DIODE	1	
D7304		MA3100L	DIODE	1	
D7401		MA723VT	DIODE	1	
D7402		1SS254	DIODE	1	
D7406,07		1SS254	DIODE	2	
D7408		M1MA151WK	DIODE	1	
D7672,73		MA3150-H	DIODE	2	
D7851		1SS254	DIODE	1	
			DELAYS		
DL801		EFDUN124A13N	DELAY	1	
DL802		VLD0198	DELAY	1	
			FILTERS		
FL3901		VLF0413	FILTER	1	
FL4501		VLF0947	FILTER	1	
			INTEGRATED CIRCUITS		
IC301		MSM7403MS	IC	1	
IC302		VEFH14D	IC	1	
IC303		UPC78L05J	IC	1	
IC701		M51366SP	IC	1	
IC801		M52352FP	IC	1	
IC2001		AN3727S	IC	1	
IC2002		UPC358G2	IC	1	
IC2501		BA6435S	IC	1	
IC2502		UPC358G2	IC	1	
IC2503		SI-3090CA	IC	1	
IC2504		TPIC0130N	IC	1	
IC3901		M52474P	IC	1	
IC3902		BA7004	IC	1	
IC4001		RC4565DD	IC	1	
IC4501		BH7770KS	IC	1	
IC4601		BA7755AF	IC	1	
IC4901		LA7155M	IC	1	
IC6001		MN67431VREG	IC	1	
IC6002		MC14519BF	IC	1	
IC6003		BU5863F	IC	1	
IC6004		MN1280S	IC	1	
IC7301		TDA3803A	IC	1	
IC7302		TA8721SN	IC	1	
IC7401		M66006FP	IC	1	
IC7851		MN158413VSSY	IC	1	
IC7852		MN1280S	IC	1	
IC7853		SDA5642	IC	1	
			CONNECTORS		
JK3901,02		VJS1469	CONNECTOR (FEMALE)	2	
			COILS		
L302,03		VLQ0188J390	COIL 39UH	2	
L304,05		ELESQ101KA	COIL 100UH	2	
L306		ELESP560KA	COIL 56UH	1	
L307,08		VLP0099	COIL	2	
L701		ELESP680KA	COIL 68UH	1	
L711		ELQTR22XB	COIL 0.22UH	1	
L714		VLQ0305J1R2	COIL 1.2UH	1	
L715		VLQ0213K680	COIL 68UH	1	
L716		ELESP560KA	COIL 56UH	1	
L717,18		ELESP680KA	COIL 68UH	2	
L719		ELESP120KA	COIL 12UH	1	
L781		ELESP680KA	COIL 68UH	1	
L801		ELESQ101KA	COIL 100UH	1	
L802		ELESP270KA	COIL 27UH	1	
L803		ELESP560JA	COIL 56UH	1	
L804		ELESQ101KA	COIL 100UH	1	

Ref.No.		Part No.	Part Name & Description	Pcs	Remarks
L805-08		VLQ0188J150	COIL 15UH	4	
L809		ELESQ101KA	COIL 100UH	1	
L810		VLQ0188J181	COIL 180UH	1	
L812,13		ELESQ101KA	COIL 100UH	2	
L1001		VLP0083	FILTER	1	
L1701		ELESQ101KA	COIL 100UH	1	
L2001		VLQEL05F101K	COIL 100UH	1	
L2002		VLP0085	FILTER	1	
L2003		VLQEL05F101K	COIL 100UH	1	
L2004		VLP0099	COIL	1	
L2005		VLQ0531	COIL	1	
L2501		ELESP102KA	COIL 1000UH	1	
L2502,03		ELESQ101KA	COIL 100UH	2	
L2504		ERDS2T0	C.RESISTOR 1/4W 0	1	
L2505		VLQ0558K331	COIL	1	
L3001		ELESP1R0KA	COIL 1UH	1	
L3002		VLQEL05F101K	COIL 100UH	1	
L3004		ELESQ151JA	COIL 150UH	1	
L3005		ELESQ820JA	COIL 82UH	1	
L3010		ELESP270JA	COIL 27UH	1	
L3011		VLQEL05F101K	COIL 100UH	1	
L3012		ELESP6R8JA	COIL 6.8UH	1	
L3014		ELESP5R6JA	COIL 5.6UH	1	
L3015		ELESQ101JA	COIL 100UH	1	
L3016		ELESQ120JA	COIL 12UH	1	
L3017		VLQEL05F101K	COIL 100UH	1	
L3901,02		ELESQ101KA	COIL 100UH	2	
L3903		VLQ0188K330	COIL 33UH	1	
L4001		ELESP471KA	COIL 470UH	1	
L4501,02		ELESQ101KA	COIL 100UH	2	
L4601		VLQEL07F153J	COIL 15MH	1	
L4901		ELESP102KA	COIL 1000UH	1	
L4902,03		ELESQ101KA	COIL 100UH	2	
L4904-08		ELESP102KA	COIL 1000UH	5	
L4909,10		ELESQ101KA	COIL 100UH	2	
L5001		ELESQ101KA	COIL 100UH	1	
L5002		VLQ0188J270	COIL 27UH	1	
L5003		ELESP270JA	COIL 27UH	1	
L5004		ELESQ150JA	COIL 15UH	1	
L6001		VLP0074	COIL	1	
L7301		ELESP102KA	COIL 1000UH	1	
L7401-03		VLQEL05F101K	COIL 100UH	3	
L7404		ELESP1R0KA	COIL 1UH	1	
L7405		VLQEL05F101K	COIL 100UH	1	
L7406		ERJ6GMZ0R00	M.RESISTOR CH 1/10W 0	1	
			CONNECTORS		
P1		VJS1737	CONNECTOR (FEMALE)	1	
P001		VJS1738	CONNECTOR (FEMALE)	1	
P501		VJS0171R	CONNECTOR (FEMALE)	1	
P551		VJS1741	CONNECTOR (FEMALE)	1	
P1003		VJP1238T	CONNECTOR (MALE) 11P	1	
P1003		VJS1238T	CONNECTOR (FEMALE)	1	
P1101		VJS1237T	CONNECTOR (FEMALE)	1	
P1523		VJS1141	CONNECTOR (FEMALE)	1	
P2001		VJS1663	CONNECTOR (FEMALE)	1	
P2002		VJP1232T	CONNECTOR (MALE) 5P	1	
P2002		VJS1738	CONNECTOR (FEMALE)	1	
P2501		VJP1231T	CONNECTOR (MALE) 4P	1	
P2501		VJS1737	CONNECTOR (FEMALE)	1	
P3001		VJP1238T	CONNECTOR (MALE) 11P	1	
P3001		VJS1238T	CONNECTOR (FEMALE)	1	
P3901		VJP1231T	CONNECTOR (MALE) 4P	1	
P3901		VJP1246T	CONNECTOR (MALE) 6P	1	
P3903		VJS1233T	CONNECTOR (FEMALE)	1	
P4001		VJP1233T	CONNECTOR (MALE) 6P	1	
P4002		VJP1235T	CONNECTOR (MALE) 8P	1	
P4002		VJS1741	CONNECTOR (FEMALE)	1	
P4003		VJP1229T	CONNECTOR (MALE) 2P	1	
P4003		VJS1229T	CONNECTOR (FEMALE)	1	
P4004		VJP1239T	CONNECTOR (MALE) 12P	1	
P4004		VJS1745	CONNECTOR (FEMALE)	1	
P4801		VJS1233T	CONNECTOR (FEMALE)	1	
P4802		VJS1231T	CONNECTOR (FEMALE)	1	

Ref.No.		Part No.	Part Name & Description	Pcs	Remarks
P6001		VJS1663	CONNECTOR (FEMALE)	1	
P6004		VJS2571A004	CONNECTOR (FEMALE)	1	
P6005		VJS3193A020A	CONNECTOR (FEMALE)	1	
P6006		VJS3193A018A	CONNECTOR (FEMALE)	1	
P6511		VJS1745	CONNECTOR (FEMALE)	1	
P6902		VJP1230T	CONNECTOR (MALE) 3P	1	
P6902		VJS1230T	CONNECTOR (FEMALE)	1	
PK301		VJR0163	PACK PIN	1	
PK302		VJR0130	PACK PIN	1	
PK303		VJR0161	PACK PIN	1	
PP804		VJP3043A005W	CONNECTOR (MALE)	1	
PP2501		VJP3043G010W	CONNECTOR (MALE)	1	
PP2502		VJP3043G008W	CONNECTOR (MALE)	1	
PP2503		VJP3043G012W	CONNECTOR (MALE)	1	
PP3001		VJP3044G009W	CONNECTOR (MALE)	1	
PP3002		VJP3044G012W	CONNECTOR (MALE)	1	
PP3003		VJP3044G007W	CONNECTOR (MALE)	1	
PP3901		VJP3042A016W	CONNECTOR (MALE)	1	
PP3902		VJP3042G017W	CONNECTOR (MALE)	1	
PP7401-03		VJP3043A005W	CONNECTOR (MALE)	3	
PP7404		VJP3043A006W	CONNECTOR (MALE)	1	
PP7705		VJP3043A004W	CONNECTOR (MALE)	1	
PS701-03		VJS3043B005W	CONNECTOR (FEMALE)	3	
PS704		VJS3043B006W	CONNECTOR (FEMALE)	1	
PS2501		VJS3043B010W	CONNECTOR (FEMALE)	1	
PS2502		VJS3043F008W	CONNECTOR (FEMALE)	1	
PS2503		VJS3043F012W	CONNECTOR (FEMALE)	1	
PS3951		VJS3042B016W	CONNECTOR (FEMALE)	1	
PS3952		VJS3042F017W	CONNECTOR (FEMALE)	1	
PS4001		VJP3186A018	CONNECTOR (MALE)	1	
PS4001		VJS3186B018	CONNECTOR (FEMALE)	1	
PS4002		VJP3186A018	CONNECTOR (MALE)	1	
PS4002		VJS3186B018	CONNECTOR (FEMALE)	1	
PS4003		VJP3186A018	CONNECTOR (MALE)	1	
PS4003		VJS3186B018	CONNECTOR (FEMALE)	1	
PS5001		VJS3043B005W	CONNECTOR (FEMALE)	1	
PS7301,02		VJR0477	PACK PIN	2	
			TRANSISTORS		
Q301		MSC2295	TRANSISTOR	1	
Q302		MSB709	TRANSISTOR	1	
Q303		MSC2295	TRANSISTOR	1	
Q304		MSB709	TRANSISTOR	1	
Q703		MSD601-S	TRANSISTOR	1	
Q712		2SD1992	TRANSISTOR	1	
Q771		MSD601-S	TRANSISTOR	1	
Q801		MSD601	TRANSISTOR	1	
Q802		MSC2295	TRANSISTOR	1	
Q803-05		MSD601	TRANSISTOR	3	
Q1001		2SD1996-S	TRANSISTOR	1	
Q1701		2SD973B-R	TRANSISTOR	1	
Q2001		2SD1915F	TRANSISTOR	1	
Q2501		2SB772	TRANSISTOR	1	
Q3001		2SB709	TRANSISTOR CHIP	1	
Q3004,05		2SD601	TRANSISTOR CHIP	2	
Q3006		2SC2295	TRANSISTOR	1	
Q3007		MSB709	TRANSISTOR	1	
Q3008		MSC2295	TRANSISTOR	1	
Q3009		2SC2295	TRANSISTOR	1	
Q3010		MSD601	TRANSISTOR	1	
Q3014		2SB709	TRANSISTOR CHIP	1	
Q3015		2SD1938	TRANSISTOR	1	
Q3901		MSD601	TRANSISTOR	1	
Q3902		2SB1320	TRANSISTOR	1	
Q3903		MSD601	TRANSISTOR	1	
Q3904		MSB709	TRANSISTOR	1	
Q3905		MSD1328	TRANSISTOR	1	

Ref.No.		Part No.	Part Name & Description	Pcs	Remarks
Q3906		MSB709	TRANSISTOR	1	
Q3907		MSD601	TRANSISTOR	1	
Q4002		2SB710-R	TRANSISTOR	1	
Q4003		MSB710-R	TRANSISTOR	1	
Q4004		2SB1378	TRANSISTOR	1	
Q4005		MSB710-R	TRANSISTOR	1	
Q4006		2SD602A	TRANSISTOR	1	
Q4501		2SD655	TRANSISTOR	1	
Q4551		2SB561	TRANSISTOR	1	
Q4601		MSD1328	TRANSISTOR	1	
Q5001		MSB709	TRANSISTOR	1	
Q5002		MSD601	TRANSISTOR	1	
Q5003		2SA1022	TRANSISTOR CHIP	1	
Q5005		XN1501	TWIN TRANSISTOR	1	
Q5006		MSB709	TRANSISTOR	1	
Q5007		MSC2295	TRANSISTOR	1	
Q5008		MSB709	TRANSISTOR	1	
Q5009-13		MSC2295	TRANSISTOR	5	
Q6001		2SD655	TRANSISTOR	1	
Q6003		2SD893	TRANSISTOR	1	
Q6004,05		2SD1994-S	TRANSISTOR	2	
Q6006		MSD602	TRANSISTOR	1	
Q6101		MSD601	TRANSISTOR	1	
Q6102		MSB709	TRANSISTOR	1	
Q6105		MSD601	TRANSISTOR	1	
Q7301		MSD601-ST	TRANSISTOR	1	
Q7304,05		MSD601	TRANSISTOR	2	
Q7306		2SC2404-C	TRANSISTOR CHIP	1	
Q7307		2SD1328	TRANSISTOR	1	
Q7401		2SB710	TRANSISTOR CHIP	1	
			COMBINATION PARTS		
QR301		DTC363EK	TRANSISTOR-RESISTOR	1	
QR303		MRN1404	TRANSISTOR	1	
QR304		MRN1403	TRANSISTOR	1	
QR305		MRN1404	TRANSISTOR	1	
QR306		IMH5	TRANSISTOR-RESISTOR	1	
QR701,02		MRN1404	TRANSISTOR	2	
QR711,12		MRN1403	TRANSISTOR	2	
QR801		MRN2404	TRANSISTOR	1	
QR803		MRN1404	TRANSISTOR	1	
QR805		MRN1403	TRANSISTOR	1	
QR807		MRN1403	TRANSISTOR	1	
QR1001,02		MRN1402	TRANSISTOR	2	
QR2001,02		MRN1404	TRANSISTOR	2	
QR2502,03		MRN1403	TRANSISTOR	2	
QR2504		MRN2404	TRANSISTOR	1	
QR3002,03		MRN2402	TRANSISTOR	2	
QR3006		MRN1403	TRANSISTOR	1	
QR3007		DTC363EK	COMBI.TR-R	1	
QR3008		DTC363EK	TRANSISTOR-RESISTOR	1	
QR3010		MRN1404	TRANSISTOR	1	
QR3902		MRN1403	TRANSISTOR	1	
QR3903		MRN1402	TRANSISTOR	1	
QR4001-06		MRN1404	TRANSISTOR	6	
QR4007		MRN1403	TRANSISTOR	1	
QR4010		MRN1404	TRANSISTOR	1	
QR4012		MRN1402	TRANSISTOR	1	
QR4013,14		MRN1404	TRANSISTOR	2	
QR4508,09		MRN2404	TRANSISTOR	2	
QR4510		MRN1403	TRANSISTOR	1	
QR4602		MRN2402	TRANSISTOR	1	
QR4603		MRN1404	TRANSISTOR	1	
QR6001,02		MRN2402	TRANSISTOR	2	
QR6003		MRN1402	TRANSISTOR	1	
QR6004		UN211H	IC	1	
QR6005		MRN2404	TRANSISTOR	1	
QR6006		UN211H	IC	1	
QR6007		MRN2404	TRANSISTOR	1	
QR6008		MRN2402	TRANSISTOR	1	
QR6009,10		MRN1404	TRANSISTOR	2	
QR6101		MRN1404	TRANSISTOR	1	
QR6102,03		MRN1402	TRANSISTOR	2	
QR6104		MRN1407	TRANSISTOR	1	

Ref.No.		Part No.	Part Name & Description	Pcs	Remarks
QR6105		MRN1402	TRANSISTOR	1	
QR6106		MRN1404	TRANSISTOR	1	
QR6107		MRN2404	TRANSISTOR	1	
QR6108		MRN1404	TRANSISTOR	1	
QR6109		MRN2402	TRANSISTOR	1	
QR7301,02		MRN1404	TRANSISTOR	2	
QR7312-14		MRN1402	TRANSISTOR	3	
QR7315,16		MRN1404	TRANSISTOR	2	
QR7401		UN2217	TRANSISTOR-RESISTOR	1	
QR7801		MRN2402	TRANSISTOR	1	
QR7802		MRN1404	TRANSISTOR	1	
QR7851		MRN1402	TRANSISTOR	1	
QR7852		MRN1404	TRANSISTOR	1	
			RESISTORS		
R301		ERJ6GMYJ102	M.RESISTOR CH 1/10W 1K	1	
R302		ERJ6GMYJ221	M.RESISTOR CH 1/10W 220	1	
R303,04		ERJ6GMYJ561	M.RESISTOR CH 1/10W 560	2	
R305		ERJ6GMYJ103	M.RESISTOR CH 1/10W 10K	1	
R306		ERJ6GMYJ332	M.RESISTOR CH 1/10W 3.3K	1	
R307		ERJ6GMYJ183	M.RESISTOR CH 1/10W 18K	1	
R308		ERJ6GEYJ272	M.RESISTOR CH 1/10W 2.7K	1	
R309		ERJ6GMYJ472	M.RESISTOR CH 1/10W 4.7K	1	
R310		ERJ6GMYJ682	M.RESISTOR CH 1/10W 6.8K	1	
R311		ERJ6GMYJ102	M.RESISTOR CH 1/10W 1K	1	
R313-15		ERJ6GMYJ473	M.RESISTOR CH 1/10W 47K	3	
R316,17		ERJ6GMYJ103	M.RESISTOR CH 1/10W 10K	2	
R318		ERJ6GMYJ154	M.RESISTOR CH 1/10W 150K	1	
R319		ERJ6GMYJ393	M.RESISTOR CH 1/10W 39K	1	
R320		ERJ6GMYJ392	M.RESISTOR CH 1/10W 3.9K	1	
R321		ERJ6GMYJ182	M.RESISTOR CH 1/10W 1.8K	1	
R322		ERJ6GMYJ392	M.RESISTOR CH 1/10W 3.9K	1	
R323		ERJ6GMYJ153	M.RESISTOR CH 1/10W 15K	1	
R324		ERJ6GMYJ332	M.RESISTOR CH 1/10W 3.3K	1	
R325		ERJ6GMYJ103	M.RESISTOR CH 1/10W 10K	1	
R716		ERJ6GEYJ152	M.RESISTOR CH 1/10W 1.5K	1	
R717		ERJ6GEYJ332	M.RESISTOR CH 1/10W 3.3K	1	
R718		ERJ6GEYJ754	M.RESISTOR CH 1/10W 750K	1	
R719,20		ERJ6GEYJ682	M.RESISTOR CH 1/10W 6.8K	2	
R721		ERJ6GEYJ272	M.RESISTOR CH 1/10W 2.7K	1	
R722		ERJ6GEYJ332	M.RESISTOR CH 1/10W 3.3K	1	
R723		ERJ6GEYJ183	M.RESISTOR CH 1/10W 18K	1	
R724		ERDS2TJ101	C.RESISTOR 1/4W 100	1	
R725		ERJ6GEYJ182	M.RESISTOR CH 1/10W 1.8K	1	
R726		ERJ6GEYJ472	M.RESISTOR CH 1/10W 4.7K	1	
R727		ERJ6GEYJ471	M.RESISTOR CH 1/10W 470	1	
R728		ERDS2TJ471	C.RESISTOR 1/4W 470	1	
R737		ERJ6GEYJ274	M.RESISTOR CH 1/10W 270K	1	
R738		ERJ6GEYJ334	M.RESISTOR CH 1/10W 330K	1	
R740		ERJ6GEYJ473	M.RESISTOR CH 1/10W 47K	1	
R741		ERJ6GEYJ562	M.RESISTOR CH 1/10W 5.6K	1	
R743		ERJ6GEYJ470	M.RESISTOR CH 1/10W 47	1	
R744		ERJ6GEYJ821	M.RESISTOR CH 1/10W 820	1	
R745		ERJ6GEYJ331	M.RESISTOR CH 1/10W 330	1	
R746		ERDS2TJ181	C.RESISTOR 1/4W 180	1	
R747		ERJ6GEYJ471	M.RESISTOR CH 1/10W 470	1	
R750		ERJ6GEYJ182	M.RESISTOR CH 1/10W 1.8K	1	
R759		ERJ6GEYJ103	M.RESISTOR CH 1/10W 10K	1	
R772		ERJ6GEYJ271	M.RESISTOR CH 1/10W 270	1	
R773		ERJ6GEYJ472	M.RESISTOR CH 1/10W 4.7K	1	
R774		ERJ6GEYJ562	M.RESISTOR CH 1/10W 5.6K	1	
R781		ERJ6GEYJ271	M.RESISTOR CH 1/10W 270	1	
R782		ERJ6GEYJ821	M.RESISTOR CH 1/10W 820	1	
R792		ERDS2TJ120	C.RESISTOR 1/4W 12	1	
R801		ERJ6GMYJ821	M.RESISTOR CH 1/10W 820	1	
R802		ERJ6GMYJ102	M.RESISTOR CH 1/10W 1K	1	
R803		ERJ6GMYJ471	M.RESISTOR CH 1/10W 470	1	
R804		ERJ6GMYJ102	M.RESISTOR CH 1/10W 1K	1	
R805		ERJ6GMYJ393	M.RESISTOR CH 1/10W 39K	1	
R806		ERJ6GMYJ102	M.RESISTOR CH 1/10W 1K	1	
R807,08		ERJ6GMYJ471	M.RESISTOR CH 1/10W 470	2	
R809,10		ERJ6GMYJ103	M.RESISTOR CH 1/10W 10K	2	
R811		ERJ6GEYJ821	M.RESISTOR CH 1/10W 820	1	

Ref.No.		Part No.	Part Name & Description	Pcs	Remarks
R812		ERJ6GMYJ102	M.RESISTOR CH 1/10W 1K	1	
R813,14		ERJ6GMYJ681	M.RESISTOR CH 1/10W 680	2	
R815		ERJ6GMYJ152	M.RESISTOR CH 1/10W 1.5K	1	
R816		ERJ6GMYJ122	M.RESISTOR CH 1/10W 1.2K	1	
R817		ERJ6GMYJ272	M.RESISTOR CH 1/10W 2.7K	1	
R818,19		ERJ6GMYJ102	M.RESISTOR CH 1/10W 1K	2	
R820		ERJ6GMYJ122	M.RESISTOR CH 1/10W 1.2K	1	
R821		ERJ6GMYJ271	M.RESISTOR CH 1/10W 270	1	
R823		ERJ6GMYJ122	M.RESISTOR CH 1/10W 1.2K	1	
R824		ERJ6GMYJ271	M.RESISTOR CH 1/10W 270	1	
R827		ERJ6GMYJ154	M.RESISTOR CH 1/10W 150K	1	
R828		ERJ6GMYJ204	M.RESISTOR CH 1/10W 200K	1	
R829		ERJ6GMYJ153	M.RESISTOR CH 1/10W 15K	1	
R830		ERJ6GMYJ103	M.RESISTOR CH 1/10W 10K	1	
R831		ERJ6GMYJ154	M.RESISTOR CH 1/10W 150K	1	
R832,33		ERJ6GMYJ102	M.RESISTOR CH 1/10W 1K	2	
R834		ERJ6GMYJ561	M.RESISTOR CH 1/10W 560	1	
R835,36		ERJ6GMYJ102	M.RESISTOR CH 1/10W 1K	2	
R837		ERJ6GMYJ222	M.RESISTOR CH 1/10W 2.2K	1	
R838		ERJ6GMYJ562	M.RESISTOR CH 1/10W 5.6K	1	
R839		ERJ6GMYJ152	M.RESISTOR CH 1/10W 1.5K	1	
R840		ERJ6GMYJ681	M.RESISTOR CH 1/10W 680	1	
R841		ERJ6GMYJ221	M.RESISTOR CH 1/10W 220	1	
R842		ERJ6GMYJ271	M.RESISTOR CH 1/10W 270	1	
R843		ERJ6GMYJ562	M.RESISTOR CH 1/10W 5.6K	1	
R845		ERJ6GMYJ102	M.RESISTOR CH 1/10W 1K	1	
R846		ERJ6GEYJ102	M.RESISTOR CH 1/10W 1K	1	
R847,48		ERJ6GMYJ333	M.RESISTOR CH 1/10W 33K	2	
R1002		ERDS2TJ822	C.RESISTOR 1/4W 8.2K	1	
R1003		ERJ6GMYJ561	M.RESISTOR CH 1/10W 560	1	
R1004		ERJ6GMYJ103	M.RESISTOR CH 1/10W 10K	1	
R1701		ERDS2TJ332	C.RESISTOR 1/4W 3.3K	1	
R1702		ERDS2TJ101	C.RESISTOR 1/4W 100	1	
R2001,02		ERJ6GMYJ223	M.RESISTOR CH 1/10W 22K	2	
R2003		ERJ6GMYJ221	M.RESISTOR CH 1/10W 220	1	
R2005,06		ERJ6GMYJ223	M.RESISTOR CH 1/10W 22K	2	
R2007		ERJ6GMYJ332	M.RESISTOR CH 1/10W 3.3K	1	
R2008,09		ERJ6GMYJ563	M.RESISTOR CH 1/10W 56K	2	
R2010		ERJ6GMYJ332	M.RESISTOR CH 1/10W 3.3K	1	
R2011		ERJ6GMYJ102	M.RESISTOR CH 1/10W 1K	1	
R2012		ERJ6GMYG392	M.RESISTOR CH 1/10W 3.9K	1	
R2013		ERJ6GMYJ222	M.RESISTOR CH 1/10W 2.2K	1	
R2014		ERJ6GMYJ102	M.RESISTOR CH 1/10W 1K	1	
R2015		ERJ6GMYJ221	M.RESISTOR CH 1/10W 220	1	
R2016		ERJ6GMYJ222	M.RESISTOR CH 1/10W 2.2K	1	
R2017		ERJ6GMYJ123	M.RESISTOR CH 1/10W 12K	1	
R2018		ERJ6GMZ0R00	M.RESISTOR CH 1/10W 0	1	
R2019		ERJ6GMYJ103	M.RESISTOR CH 1/10W 10K	1	
R2501		ERDS2TJ330	C.RESISTOR 1/4W 33	1	
R2502		ERJ6GMYG133	M.RESISTOR CH 1/10W 13K	1	
R2503		ERJ6GMYG103	M.RESISTOR CH 1/10W 10K	1	
R2504		ERJ6GMYG512	M.RESISTOR CH 1/10W 5.1K	1	
R2505		ERJ6GMYG513	M.RESISTOR CH 1/10W 51K	1	
R2506		ERJ6GMYJ824	M.RESISTOR CH 1/10W 820K	1	
R2507		ERJ6GMYJ102	M.RESISTOR CH 1/10W 1K	1	
R2508-10		ERDS2TJ560	C.RESISTOR 1/4W 56	3	
R2511,12		ERJ6GMYJ472	M.RESISTOR CH 1/10W 4.7K	2	
R2513		ERJ6GMYJ105	M.RESISTOR CH 1/10W 1M	1	
R2514		ERJ6GMYJ392	M.RESISTOR CH 1/10W 3.9K	1	
R2515		ERJ6GMYJ223	M.RESISTOR CH 1/10W 22K	1	
R2516		ERJ6GMYJ105	M.RESISTOR CH 1/10W 1M	1	
R2517		ERJ6GMYJ333	M.RESISTOR CH 1/10W 33K	1	
R2520		ERDS2TJ681	C.RESISTOR 1/4W 680	1	
R2521		ERDS1TJ681	C.RESISTOR 1/2W 680	1	
R2522		ERJ6GMYG473	M.RESISTOR CH 1/10W 47K	1	
R2523		ERJ6GMYG123	M.RESISTOR CH 1/10W 12K	1	
R2524		ERJ6GMYG393	M.RESISTOR CH 1/10W 39K	1	
R2525		ERJ6GMYG124	M.RESISTOR CH 1/10W 120K	1	
R2526		ERJ6GMYJ333	M.RESISTOR CH 1/10W 33K	1	
R2528		ERJ6GMYJ223	M.RESISTOR CH 1/10W 22K	1	
R2529		ERJ6GMYJ822	M.RESISTOR CH 1/10W 8.2K	1	
R2530		ERJ6GMYG272	M.RESISTOR CH 1/10W 2.7K	1	
R2531		ERJ6GMYG392	M.RESISTOR CH 1/10W 3.9K	1	
R2532		ERJ6GMYG473	M.RESISTOR CH 1/10W 47K	1	
R2534		ERSF30JR90		1	

Ref.No.		Part No.	Part Name & Description	Pcs	Remarks
R2535		ERJ6GMYJ392	M.RESISTOR CH 1/10W 3.9K	1	
R2537		ERJ6GMYJ102	M.RESISTOR CH 1/10W 1K	1	
R2538		ERJ6GMYJ153	M.RESISTOR CH 1/10W 15K	1	
R2539		ERJ6GMYJ622	M.RESISTOR CH 1/10W 6.2K	1	
R2540		ERJ6GMYJ103	M.RESISTOR CH 1/10W 10K	1	
R2541		ERJ6GMYJ472	M.RESISTOR CH 1/10W 4.7K	1	
R2542		ERX12SJR47	M.RESISTOR 1/2W 0.47	1	
R2547		ERJ6GMYJ272	M.RESISTOR CH 1/10W 2.7K	1	
R3002		ERJ6GMYJ102	M.RESISTOR CH 1/10W 1K	1	
R3003		ERDS2TJ561	C.RESISTOR 1/4W 560	1	
R3008		ERJ6GMYJ471	M.RESISTOR CH 1/10W 470	1	
R3009		ERJ6GMYJ561	M.RESISTOR CH 1/10W 560	1	
R3010		ERJ6GMZ0R00	M.RESISTOR CH 1/10W 0	1	
R3012		ERJ6GMYJ102	M.RESISTOR CH 1/10W 1K	1	
R3013		ERJ6GMYJ222	M.RESISTOR CH 1/10W 2.2K	1	
R3014		ERJ6GMYJ681	M.RESISTOR CH 1/10W 680	1	
R3015		ERJ6GMYJ222	M.RESISTOR CH 1/10W 2.2K	1	
R3016,17		ERJ6GMYJ473	M.RESISTOR CH 1/10W 47K	2	
R3018		ERJ6GMYJ102	M.RESISTOR CH 1/10W 1K	1	
R3020		ERJ6GMYJ103	M.RESISTOR CH 1/10W 10K	1	
R3022		ERJ6GMYJ103	M.RESISTOR CH 1/10W 10K	1	
R3023		ERJ6GMZ0R00	M.RESISTOR CH 1/10W 0	1	
R3024,25		ERJ6GMYJ821	M.RESISTOR CH 1/10W 820	2	
R3026		ERJ6GMYJ391	M.RESISTOR CH 1/10W 390	1	
R3027		ERJ6GMYJ561	M.RESISTOR CH 1/10W 560	1	
R3028		ERJ6GMYJ222	M.RESISTOR CH 1/10W 2.2K	1	
R3029		ERJ6GMYJ561	M.RESISTOR CH 1/10W 560	1	
R3030		ERJ6GMYJ472	M.RESISTOR CH 1/10W 4.7K	1	
R3032		ERJ6GMYJ392	M.RESISTOR CH 1/10W 3.9K	1	
R3037,38		ERJ6GMYJ473	M.RESISTOR CH 1/10W 47K	2	
R3039		ERJ6GMYJ102	M.RESISTOR CH 1/10W 1K	1	
R3041		ERJ6GMYJ152	M.RESISTOR CH 1/10W 1.5K	1	
R3042-44		ERJ6GMYJ222	M.RESISTOR CH 1/10W 2.2K	3	
R3047		ERJ6GMYJ104	M.RESISTOR CH 1/10W 100K	1	
R3049		ERJ6GMYJ102	M.RESISTOR CH 1/10W 1K	1	
R3050		ERJ6GMYJ562	M.RESISTOR CH 1/10W 5.6K	1	
R3901-04		ERJ6GEYJ750	M.RESISTOR CH 1/10W 75	4	
R3905		ERJ6GEYJ153	M.RESISTOR CH 1/10W 15K	1	
R3906		ERJ6GEYG223	M.RESISTOR CH 1/10W 22K	1	
R3907		ERJ6GEYJ103	M.RESISTOR CH 1/10W 10K	1	
R3908-10		ERJ6GEYJ471	M.RESISTOR CH 1/10W 470	3	
R3911,12		ERJ6GEYJ151	M.RESISTOR CH 1/10W 150	2	
R3913		ERJ6GEYJ152	M.RESISTOR CH 1/10W 1.5K	1	
R3914		ERJ6GEYJ392	M.RESISTOR CH 1/10W 3.9K	1	
R3915		ERJ6GEYJ102	M.RESISTOR CH 1/10W 1K	1	
R3916		ERJ6GEYJ472	M.RESISTOR CH 1/10W 4.7K	1	
R3917		ERJ6GEYJ561	M.RESISTOR CH 1/10W 560	1	
R3918		ERJ6GEYJ152	M.RESISTOR CH 1/10W 1.5K	1	
R3919		ERJ6GEYJ472	M.RESISTOR CH 1/10W 4.7K	1	
R3920		ERJ6GEYG223	M.RESISTOR CH 1/10W 22K	1	
R3921		ERJ6GEYJ153	M.RESISTOR CH 1/10W 15K	1	
R3922		ERJ6GEYJ750	M.RESISTOR CH 1/10W 75	1	
R3923,24		ERJ6GEYJ562	M.RESISTOR CH 1/10W 5.6K	2	
R3925		ERJ6GEYJ222	M.RESISTOR CH 1/10W 2.2K	1	
R3926		ERJ6GEYJ103	M.RESISTOR CH 1/10W 10K	1	
R3927,28		ERJ6GEYJ472	M.RESISTOR CH 1/10W 4.7K	2	
R3929		ERJ6GEYJ272	M.RESISTOR CH 1/10W 2.7K	1	
R3930,31		ERJ6GEYJ472	M.RESISTOR CH 1/10W 4.7K	2	
R3933		ERJ6GEYJ472	M.RESISTOR CH 1/10W 4.7K	1	
R3934		ERJ6GEYJ103	M.RESISTOR CH 1/10W 10K	1	
R3935-37		ERJ6GEYJ472	M.RESISTOR CH 1/10W 4.7K	3	
R4001		ERJ6GMYJ683	M.RESISTOR CH 1/10W 68K	1	
R4003		ERJ6GMYJ332	M.RESISTOR CH 1/10W 3.3K	1	
R4004		ERJ6GMYJ103	M.RESISTOR CH 1/10W 10K	1	
R4005		ERDS2TJ680	C.RESISTOR 1/4W 68	1	
R4006,07		ERJ6GMYJ103	M.RESISTOR CH 1/10W 10K	2	
R4008		ERDS2TJ680	C.RESISTOR 1/4W 68	1	
R4009		ERJ6GMYJ473	M.RESISTOR CH 1/10W 47K	1	
R4010		ERJ6GMYJ223	M.RESISTOR CH 1/10W 22K	1	
R4011		ERJ6GMYJ222	M.RESISTOR CH 1/10W 2.2K	1	
R4012		ERJ6GMYJ332	M.RESISTOR CH 1/10W 3.3K	1	
R4013		ERJ6GMYJ152	M.RESISTOR CH 1/10W 1.5K	1	
R4014		ERJ6GMYJ332	M.RESISTOR CH 1/10W 3.3K	1	
R4015		ERJ6GMYJ562	M.RESISTOR CH 1/10W 5.6K	1	
R4019		ERJ6GMYJ153	M.RESISTOR CH 1/10W 15K	1	

Ref.No.		Part No.	Part Name & Description	Pcs	Remarks
R4020,21		ERJ6GMZ0R00	M.RESISTOR CH 1/10W 0	2	
R4022		ERJ6GMYJ100	M.RESISTOR CH 1/10W 10	1	
R4024		ERJ6GMZ0R00	M.RESISTOR CH 1/10W 0	1	
R4025,26		ERJ6GMYJ562	M.RESISTOR CH 1/10W 5.6K	2	
R4027		ERJ6GMZ0R00	M.RESISTOR CH 1/10W 0	1	
R4028,29		ERJ6GMYJ103	M.RESISTOR CH 1/10W 10K	2	
R4034		ERJ6GMYJ473	M.RESISTOR CH 1/10W 47K	1	
R4035		ERJ6GMYJ103	M.RESISTOR CH 1/10W 10K	1	
R4036		ERJ6GMYJ333	M.RESISTOR CH 1/10W 33K	1	
R4037-40		ERJ6GMYJ103	M.RESISTOR CH 1/10W 10K	4	
R4041,42		ERJ6GMYJ104	M.RESISTOR CH 1/10W 100K	2	
R4043		ERJ6GMYJ103	M.RESISTOR CH 1/10W 10K	1	
R4044		ERJ6GMYJ222	M.RESISTOR CH 1/10W 2.2K	1	
R4102		ERJ6GMYG303	M.RESISTOR CH 1/10W 30K	1	
R4103		ERJ6GMYG623	M.RESISTOR CH 1/10W 62K	1	
R4104		ERJ6GMYJ823	M.RESISTOR CH 1/10W 82K	1	
R4501,02		ERJ3GEY0R00	M.RESISTOR CH 1/16W 0	2	
R4503		VRE0071E36C	M.RESISTOR	1	
R4504,05		ERJ6GEYJ393	M.RESISTOR CH 1/10W 39K	2	
R4506,07		ERJ6GEYJ473	M.RESISTOR CH 1/10W 47K	2	
R4508		ERJ6GEYG224	M.RESISTOR CH 1/10W 220K	1	
R4509		ERJ6GEYJ822	M.RESISTOR CH 1/10W 8.2K	1	
R4510		ERJ6GEYJ621	M.RESISTOR CH 1/10W 620	1	
R4511		ERJ6GEYG303	M.RESISTOR CH 1/10W 30K	1	
R4512		VRE0034E163	M.RESISTOR CH 1/10W 16K	1	
R4513		ERJ3GEYG103	M.RESISTOR CH 1/16W 10K	1	
R4514		ERJ6GEYG223	M.RESISTOR CH 1/10W 22K	1	
R4518,19		ERJ6GMZ0R00	M.RESISTOR CH 1/10W 0	2	
R4522		ERJ6GEYJ225	M.RESISTOR CH 1/10W 2.2M	1	
R4527		VRE0034E333	M.RESISTOR CH 1/10W 33K	1	
R4528		VRE0034E153	M.RESISTOR CH 1/10W 15K	1	
R4529		ERJ6GEYG562	M.RESISTOR CH 1/10W 5.6K	1	
R4530		ERJ3GEYJ334	M.RESISTOR CH 1/16W 330K	1	
R4534		ERJ6GEYJ472	M.RESISTOR CH 1/10W 4.7K	1	
R4535		ERJ3GEYJ104	M.RESISTOR CH 1/16W 100K	1	
R4539		ERJ6GEYJ104	M.RESISTOR CH 1/10W 100K	1	
R4540		ERJ3GEY0R00	M.RESISTOR CH 1/16W 0	1	
R4541		ERJ6GEYJ152	M.RESISTOR CH 1/10W 1.5K	1	
R4542		ERJ6GEYJ222	M.RESISTOR CH 1/10W 2.2K	1	
R4543		ERJ3GEYJ472	M.RESISTOR CH 1/16W 4.7K	1	
R4551,52		ERJ3GEYJ393	M.RESISTOR CH 1/16W 39K	2	
R4553		ERJ6GEYJ273	M.RESISTOR CH 1/10W 27K	1	
R4554		ERJ3GEYJ273	M.RESISTOR CH 1/16W 27K	1	
R4558		ERJ6GEYG224	M.RESISTOR CH 1/10W 220K	1	
R4561		ERJ6GEYG303	M.RESISTOR CH 1/10W 30K	1	
R4562		VRE0034E10C	M.RESISTOR 1/10W	1	
R4563		ERJ3GEYG272	M.RESISTOR CH 1/16W 2.7K	1	
R4568		ERJ6GEYJ273	M.RESISTOR CH 1/10W 27K	1	
R4569		ERJ3GEYJ273	M.RESISTOR CH 1/16W 27K	1	
R4573		ERJ6GEYJ152	M.RESISTOR CH 1/10W 1.5K	1	
R4577		ERJ3GEYJ473	M.RESISTOR CH 1/16W 47K	1	
R4578		VRE0034E473	M.RESISTOR CH 1/10W 47K	1	
R4581		ERJ6GEYJ104	M.RESISTOR CH 1/10W 100K	1	
R4583		ERJ3GEYJ102	M.RESISTOR CH 1/16W 1K	1	
R4584		ERJ6GEYJ152	M.RESISTOR CH 1/10W 1.5K	1	
R4585		ERJ3GEY0R00	M.RESISTOR CH 1/16W 0	1	
R4586		ERJ6GEYJ152	M.RESISTOR CH 1/10W 1.5K	1	
R4587,88		ERJ3GEYJ273	M.RESISTOR CH 1/16W 27K	2	
R4591		ERJ3GEYJ473	M.RESISTOR CH 1/16W 47K	1	
R4592		ERJ6GEYG563	M.RESISTOR CH 1/10W 56K	1	
R4593		ERJ6GEYJ472	M.RESISTOR CH 1/10W 4.7K	1	
R4594		ERJ3GEYJ473	M.RESISTOR CH 1/16W 47K	1	
R4603		ERJ3GEYG183	M.RESISTOR CH 1/16W 18K	1	
R4606		ERJ6GEYJ562	M.RESISTOR CH 1/10W 5.6K	1	
R4610		ERJ6GEYJ473	M.RESISTOR CH 1/10W 47K	1	
R4611,12		ERJ6GEYJ331	M.RESISTOR CH 1/10W 330	2	
R4613		ERJ6GEYJ394	M.RESISTOR CH 1/10W 390K	1	
R4615		ERJ6GEYJ133	M.RESISTOR CH 1/10W 13K	1	
R4616		ERJ6GEYJ105	M.RESISTOR CH 1/10W 1M	1	
R4638		ERJ6GMZ0R00	M.RESISTOR CH 1/10W 0	1	
R4649		ERJ3GEYG470	M.RESISTOR 1/16W 47	1	
R4651		ERJ6GEYJ101	M.RESISTOR CH 1/10W 100	1	
R4653		ERJ6GEYJ471	M.RESISTOR CH 1/10W 470	1	
R4654		ERJ6GEYG223	M.RESISTOR CH 1/10W 22K	1	
R4655		ERJ6GEYJ562	M.RESISTOR CH 1/10W 5.6K	1	

Ref.No.		Part No.	Part Name & Description	Pcs	Remarks
R4656		ERJ6GEYG243	M.RESISTOR CH 1/10W 24K	1	
R4657		ERJ6GEYJ392	M.RESISTOR CH 1/10W 3.9K	1	
R4659		ERJ6GEYJ123	M.RESISTOR CH 1/10W 12K	1	
R4666		ERJ6GEYJ471	M.RESISTOR CH 1/10W 470	1	
R4901		ERJ6GEYJ391	M.RESISTOR CH 1/10W 390	1	
R4902		ERJ6GEYJ222	M.RESISTOR CH 1/10W 2.2K	1	
R4903		ERJ6GEYJ391	M.RESISTOR CH 1/10W 390	1	
R4904		ERJ6GEYJ222	M.RESISTOR CH 1/10W 2.2K	1	
R4905		ERJ6GEYJ391	M.RESISTOR CH 1/10W 390	1	
R4906		ERJ6GEYJ222	M.RESISTOR CH 1/10W 2.2K	1	
R4907		ERJ6GEYJ391	M.RESISTOR CH 1/10W 390	1	
R4908		ERJ6GEYJ222	M.RESISTOR CH 1/10W 2.2K	1	
R4909,10		ERJ6GEYJ221	M.RESISTOR CH 1/10W 220	2	
R4911		ERJ6GEYJ104	M.RESISTOR CH 1/10W 100K	1	
R4912		ERJ6GEYG163	M.RESISTOR CH 1/10W 16K	1	
R4913,14		ERJ6GEYJ433	M.RESISTOR CH 1/10W 43K	2	
R4915		ERJ6GEYG163	M.RESISTOR CH 1/10W 16K	1	
R4916		ERJ6GEYJ104	M.RESISTOR CH 1/10W 100K	1	
R4917-20		ERJ6GEYJ473	M.RESISTOR CH 1/10W 47K	4	
R4921		ERJ6GEYJ333	M.RESISTOR CH 1/10W 33K	1	
R4922,23		ERJ6GEYG223	M.RESISTOR CH 1/10W 22K	2	
R4924		ERJ6GEYJ333	M.RESISTOR CH 1/10W 33K	1	
R5003		ERJ6GEYJ102	M.RESISTOR CH 1/10W 1K	1	
R5004		ERJ6GEYJ221	M.RESISTOR CH 1/10W 220	1	
R5005		ERJ6GEYJ472	M.RESISTOR CH 1/10W 4.7K	1	
R5006		ERJ6GEYJ124	M.RESISTOR CH 1/10W 120K	1	
R5007		ERJ6GEYG223	M.RESISTOR CH 1/10W 22K	1	
R5012		ERJ6GEYG563	M.RESISTOR CH 1/10W 56K	1	
R5013		ERJ6GEYG123	M.RESISTOR CH 1/10W 12K	1	
R5014		ERJ6GEYG223	M.RESISTOR CH 1/10W 22K	1	
R5016,17		ERJ6GEYJ102	M.RESISTOR CH 1/10W 1K	2	
R5018		ERJ6GEYJ123	M.RESISTOR CH 1/10W 12K	1	
R5019		ERJ6GEYJ682	M.RESISTOR CH 1/10W 6.8K	1	
R5020		ERJ6GEYJ102	M.RESISTOR CH 1/10W 1K	1	
R5021,22		ERJ6GEYJ681	M.RESISTOR CH 1/10W 680	2	
R5023		ERJ6GEYJ271	M.RESISTOR CH 1/10W 270	1	
R5025		ERJ6GEYJ102	M.RESISTOR CH 1/10W 1K	1	
R5027		ERJ6GEYJ391	M.RESISTOR CH 1/10W 390	1	
R5028,29		ERJ6GEYJ102	M.RESISTOR CH 1/10W 1K	2	
R5030		ERJ6GEYJ471	M.RESISTOR CH 1/10W 470	1	
R5031		ERJ6GEYJ102	M.RESISTOR CH 1/10W 1K	1	
R6001		ERJ6GMYJ332	M.RESISTOR CH 1/10W 3.3K	1	
R6002		ERJ6GMYJ103	M.RESISTOR CH 1/10W 10K	1	
R6003		ERJ6GMYJ222	M.RESISTOR CH 1/10W 2.2K	1	
R6004		ERJ6GMYJ122	M.RESISTOR CH 1/10W 1.2K	1	
R6005		ERJ6GMYJ332	M.RESISTOR CH 1/10W 3.3K	1	
R6006,07		ERJ6GMYJ333	M.RESISTOR CH 1/10W 33K	2	
R6008-10		ERJ6GMYJ561	M.RESISTOR CH 1/10W 560	3	
R6011		ERJ6GMYJ104	M.RESISTOR CH 1/10W 100K	1	
R6012,13		ERJ6GMYJ103	M.RESISTOR CH 1/10W 10K	2	
R6014-19		ERJ6GMYJ333	M.RESISTOR CH 1/10W 33K	6	
R6021		ERJ6GMYJ152	M.RESISTOR CH 1/10W 1.5K	1	
R6024		ERJ6GMYJ332	M.RESISTOR CH 1/10W 3.3K	1	
R6027		ERJ6GMYJ473	M.RESISTOR CH 1/10W 47K	1	
R6028		ERJ6GMYJ563	M.RESISTOR CH 1/10W 56K	1	
R6029		ERJ6GMYJ561	M.RESISTOR CH 1/10W 560	1	
R6030		ERJ6GMYJ271	M.RESISTOR CH 1/10W 270	1	
R6031		ERJ6GMYJ561	M.RESISTOR CH 1/10W 560	1	
R6032		ERJ6GMYJ562	M.RESISTOR CH 1/10W 5.6K	1	
R6033		ERJ6GMYJ221	M.RESISTOR CH 1/10W 220	1	
R6034		ERJ6GMYJ152	M.RESISTOR CH 1/10W 1.5K	1	
R6035		ERJ6GMYJ562	M.RESISTOR CH 1/10W 5.6K	1	
R6036		ERJ6GMYJ201	M.RESISTOR CH 1/10W 200	1	
R6037		ERG3SJ220	M.RESISTOR 3W 22	1	
R6038		ERJ6GMYJ103	M.RESISTOR CH 1/10W 10K	1	
R6039		ERJ6GMYJ101	M.RESISTOR CH 1/10W 100	1	
R6040		ERD2FCVG220	C.RESISTOR 2W 22	1	<!>
R6041		ERJ6GMYJ471	M.RESISTOR CH 1/10W 470	1	
R6043,44		ERJ6GMYJ272	M.RESISTOR CH 1/10W 2.7K	2	
R6045		ERJ6GMYJ221	M.RESISTOR CH 1/10W 220	1	
R6046		ERJ6GMYJ103	M.RESISTOR CH 1/10W 10K	1	
R6047		ERJ6GMYJ101	M.RESISTOR CH 1/10W 100	1	
R6048,49		ERJ6GMYJ103	M.RESISTOR CH 1/10W 10K	2	
R6050,51		ERJ6GMYJ223	M.RESISTOR CH 1/10W 22K	2	
R6052		ERJ6GMYJ683	M.RESISTOR CH 1/10W 68K	1	

Ref.No.		Part No.	Part Name & Description	Pcs	Remarks
R6053		ERJ6GMYJ184	M.RESISTOR CH 1/10W 180K	1	
R6054		ERJ6GMYJ223	M.RESISTOR CH 1/10W 22K	1	
R6055		ERJ6GMYJ181	M.RESISTOR CH 1/10W 180	1	
R6057		ERJ6GMYJ103	M.RESISTOR CH 1/10W 10K	1	
R6058		ERJ6GMYJ131	M.RESISTOR CH 1/10W 130	1	
R6059		ERJ6GMYJ332	M.RESISTOR CH 1/10W 3.3K	1	
R6060		ERJ6GMYJ101	M.RESISTOR CH 1/10W 100	1	
R6061		ERJ6GMYJ223	M.RESISTOR CH 1/10W 22K	1	
R6101		ERJ6GMYJ222	M.RESISTOR CH 1/10W 2.2K	1	
R6102		ERJ6GMYJ103	M.RESISTOR CH 1/10W 10K	1	
R6103		ERJ6GMYJ333	M.RESISTOR CH 1/10W 33K	1	
R6104,05		ERJ6GMYJ223	M.RESISTOR CH 1/10W 22K	2	
R6106		ERJ6GMYJ393	M.RESISTOR CH 1/10W 39K	1	
R6108,09		ERJ6GMYJ101	M.RESISTOR CH 1/10W 100	2	
R6110		ERJ6GMYJ183	M.RESISTOR CH 1/10W 18K	1	
R6111		ERJ6GMYJ472	M.RESISTOR CH 1/10W 4.7K	1	
R6112,13		ERJ6GMYJ101	M.RESISTOR CH 1/10W 100	2	
R6115		ERJ6GMYJ562	M.RESISTOR CH 1/10W 5.6K	1	
R6116		ERJ6GMYJ223	M.RESISTOR CH 1/10W 22K	1	
R6117		ERJ6GMYJ222	M.RESISTOR CH 1/10W 2.2K	1	
R6118,19		ERJ6GMYJ473	M.RESISTOR CH 1/10W 47K	2	
R6301		ERJ6GMZ0R00	M.RESISTOR CH 1/10W 0	1	
R7302		ERJ6GEYJ392	M.RESISTOR CH 1/10W 3.9K	1	
R7303		ERJ6GEYJ182	M.RESISTOR CH 1/10W 1.8K	1	
R7304		ERJ6GEYJ392	M.RESISTOR CH 1/10W 3.9K	1	
R7305		ERJ6GEYJ822	M.RESISTOR CH 1/10W 8.2K	1	
R7306		ERJ6GEYJ471	M.RESISTOR CH 1/10W 470	1	
R7307		ERJ6GEYJ104	M.RESISTOR CH 1/10W 100K	1	
R7308		ERJ6GEYJ273	M.RESISTOR CH 1/10W 27K	1	
R7309		ERDS2TJ102	C.RESISTOR 1/4W 1K	1	
R7310		ERJ6GEYJ474	M.RESISTOR CH 1/10W 470K	1	
R7311		ERJ6GEYJ562	M.RESISTOR CH 1/10W 5.6K	1	
R7312		ERJ6GEYG563	M.RESISTOR CH 1/10W 56K	1	
R7313		ERJ6GEYJ824	M.RESISTOR CH 1/10W 820K	1	
R7314,15		ERJ6GEYJ224	M.RESISTOR CH 1/10W 220K	2	
R7316		ERJ6GEYJ473	M.RESISTOR CH 1/10W 47K	1	
R7317		ERJ6GEYJ393	M.RESISTOR CH 1/10W 39K	1	
R7318		ERJ6GEYJ153	M.RESISTOR CH 1/10W 15K	1	
R7321		ERJ6GEYJ103	M.RESISTOR CH 1/10W 10K	1	
R7322		ERJ6GEYJ102	M.RESISTOR CH 1/10W 1K	1	
R7323		ERJ6GEYJ103	M.RESISTOR CH 1/10W 10K	1	
R7324,25		ERJ6GEYJ271	M.RESISTOR CH 1/10W 270	2	
R7329		ERJ6GEYJ102	M.RESISTOR CH 1/10W 1K	1	
R7330		ERJ6GEYJ332	M.RESISTOR CH 1/10W 3.3K	1	
R7334-37		ERJ6GEYJ471	M.RESISTOR CH 1/10W 470	4	
R7338		ERJ6GEYJ182	M.RESISTOR CH 1/10W 1.8K	1	
R7339		ERJ6GEYJ330	M.RESISTOR CH 1/10W 33	1	
R7340		ERJ6GEYJ152	M.RESISTOR CH 1/10W 1.5K	1	
R7341		ERJ6GEYJ681	M.RESISTOR CH 1/10W 680	1	
R7342		ERJ6GEYJ103	M.RESISTOR CH 1/10W 10K	1	
R7345		ERJ6GEYJ182	M.RESISTOR CH 1/10W 1.8K	1	
R7346		ERJ6GEYJ221	M.RESISTOR CH 1/10W 220	1	
R7347		ERJ6GEYJ681	M.RESISTOR CH 1/10W 680	1	
R7348		ERJ6GEYJ222	M.RESISTOR CH 1/10W 2.2K	1	
R7349		ERJ6GEYJ102	M.RESISTOR CH 1/10W 1K	1	
R7351-53		ERJ6GEYJ103	M.RESISTOR CH 1/10W 10K	3	
R7354,55		ERJ6GEYJ102	M.RESISTOR CH 1/10W 1K	2	
R7402		ERJ6GMYJ332	M.RESISTOR CH 1/10W 3.3K	1	
R7403,04		ERJ6GMYJ750	M.RESISTOR CH 1/10W 75	2	
R7405		ERJ6GMYJ562	M.RESISTOR CH 1/10W 5.6K	1	
R7406		ERJ6GMYJ332	M.RESISTOR CH 1/10W 3.3K	1	
R7407		ERJ6GMYJ182	M.RESISTOR CH 1/10W 1.8K	1	
R7410		ERJ6GMYJ221	M.RESISTOR CH 1/10W 220	1	
R7412		ERJ6GMYJ221	M.RESISTOR CH 1/10W 220	1	
R7414,15		ERJ6GMYJ332	M.RESISTOR CH 1/10W 3.3K	2	
R7419-21		ERJ6GMYJ332	M.RESISTOR CH 1/10W 3.3K	3	
R7422-24		ERJ6GMYJ221	M.RESISTOR CH 1/10W 220	3	
R7656		ERJ6GEYJ221	M.RESISTOR CH 1/10W 220	1	
R7676		ERG1SJ152	M.RESISTOR 1W 1.5K	1	
R7801		ERJ6GEYJ104	M.RESISTOR CH 1/10W 100K	1	
R7802		ERJ6GEYJ824	M.RESISTOR CH 1/10W 820K	1	
R7803,04		ERJ6GEYJ103	M.RESISTOR CH 1/10W 10K	2	
R7805		ERJ6GEYJ824	M.RESISTOR CH 1/10W 820K	1	
R7806		ERJ6GEYJ101	M.RESISTOR CH 1/10W 100	1	
R7807		ERJ6GEYG512	M.RESISTOR CH 1/10W 5.1K	1	

Ref.No.		Part No.	Part Name & Description	Pcs	Remarks
R7808		ERJ6GEYJ473	M.RESISTOR CH 1/10W 47K	1	
R7821		ERJ6GEYJ222	M.RESISTOR CH 1/10W 2.2K	1	
R7822		ERJ6GEYJ105	M.RESISTOR CH 1/10W 1M	1	
R7851		ERJ6GEYJ103	M.RESISTOR CH 1/10W 10K	1	
R7860		ERJ6GEYJ471	M.RESISTOR CH 1/10W 470	1	
			SWITCHES		
SW3901		VSS0225	SWITCH	1	
			TRANSFORMERS		
T703		EIV5EC013A	TRANSFORMER	1	
T704		EIV5EC006A1	TRANSFORMER	1	
T1701		VLT0683	TRANSFORMER	1	
T4001		EIQ7QF013Q	TRANSFORMER	1	
T7301		EIR7QG001B	IF TRANSFORMER	1	
T7302,03		EIL7QH012Q	TRANSFORMER	2	
T7304		EIS5EC007A	TRANSFORMER	1	
T7305		EIS5EC005A	TRANSFORMER	1	
			VARIABLE RESISTORS		
VR301		EVMF6SA00B13	V.RESISTOR 1K	1	
VR701,02		EVTF6SA00B23	V.RESISTOR 2K	2	
VR741		EVNDXAA00B14	V.RESISTOR 10K	1	
VR801,02		EVMF6SA00B13	V.RESISTOR 1K	2	
VR803		EVMF6SA00B14	V.RESISTOR 10K	1	
VR2001		EVNDXAA00B54	V.RESISTOR 50K	1	
VR2006		EVNDXAA00B15	V.RESISTOR 100K	1	
VR2011		EVNDXAA00B15	V.RESISTOR 100K	1	
VR2018,19		EVNDXAA00B15	V.RESISTOR 100K	2	
VR3001		EVNDXAA00B23	V.RESISTOR 2K	1	
VR3012,13		EVNDXAA00B52	V.RESISTOR 500	2	
VR4001		EVNDXAA00B25	V.RESISTOR 200K	1	
VR4501		EVMFLSA00B53	V.RESISTOR	1	
VR4502		EVMF6SA00B24	V.RESISTOR 20K	1	
VR4507		EVMF6SA00B24	V.RESISTOR 20K	1	
VR4509		EVMFLSA00BY3	V.RESISTOR	1	
VR4512		EVNDXAA00B52	V.RESISTOR 500	1	
VR4550		EVMFLSA00BS3	V.RESISTOR	1	
VR4551,52		EVMF6SA00B55	V.RESISTOR	2	
VR7301		EVMF6SA00B14	V.RESISTOR 10K	1	
VR7326		EVMF6SA00B52	V.RESISTOR	1	
VR7328		EVMF6SA00B52	V.RESISTOR	1	
VR7340		EVNE4AA00B14	V.RESISTOR 10K	1	
VR7342		EVNE4AA00B53	V.RESISTOR 5K	1	
VR7344		EVNE4AA00B14	V.RESISTOR 10K	1	
VR8001		EVNDXAA00B23	V.RESISTOR 2K	1	
			CRYSTAL OSCILLATORS		
X710		EFCH38MGP1	CRYSTAL OSCILLATOR	1	
X711		VLF0638	CRYSTAL OSCILLATOR	1	
X716,17		EFCA4OR40M1	CRYSTAL OSCILLATOR	2	
X801		VSX0162	CRYSTAL OSCILLATOR	1	
X3901		VSX0099	CRYSTAL OSCILLATOR	1	
X6001		VSX0383	CRYSTAL OSCILLATOR	1	
X6002		VSX0258	CRYSTAL OSCILLATOR	1	
X6003		VSQ0565	CRYSTAL OSCILLATOR	1	
X7301,02		EFCS5R5MS5B	CRYSTAL OSCILLATOR	2	
X7303,04		EFCS5R74MS5B	CRYSTAL OSCILLATOR	2	
X7305		ELB5A016	CRYSTAL OSCILLATOR	1	
X7851		EFOA4ROM03C2	CRYSTAL OSCILLATOR	1	
			MISCELLANEOUS		
		ENC17984	RF CONVERTER	1	<!>
		VJH0617	ANT TERMINAL	1	
		VWJ201W140BB	FLAT CARD (CABLE) 20P	1	(P606-P7501)
		VWJ18AW160BB	FLAT CARD (CABLE) 18P	1	(P606-P7502)
		VWJ04NB080QQ	FLAT CARD (CABLE) 4P	1	(P604-P1508)
		VSQ0687	FERRITE RING	1	

Ref.No.		Part No.	Part Name & Description	Pcs	Remarks
		VEJ1234	INPUT/OUTUT JACK PLATE	1	FOR INPUT/OUTPUT
		VMT0459	SPACER	1	FOR INPUT/OUTPUT
		VSC3440	SHIELD BARRIER	1	FOR LUMI. & CHRO.
		VMZ1913	PCB BARRIER	1	FOR LUMI. & CHRO.
		VMC0075	HEAT SINK SPRING	1	FOR SUB SERVO & SYS.
		VMZ1352	HEAT SINK COVER	1	FOR SUB SERVO & SYS.
		VSC2734	IC HEAT SINK	1	FOR SUB SERVO & SYS.
		VJR0189	PACK PIN 10P	1	FOR VPS C.B.A.
		ENV57884H6	TUNER	1	<!> FOR TV DEMO.
		VSC3242	SHIELD COVER (MAIN)	1	FOR TV DEMODULATOR
		VSC3241	SHIELD COVER (TOP)	1	FOR TV DEMODULATOR
		VSC2714	SHIELD COVER (BOTTOM)	1	FOR TV DEMODULATOR
	■	VEP05178A	HEAD AMP C.B.A.		(NLA)
			CAPACITORS		
C501,02		ECUM1H102KBN	C.CAPACITOR CH 50V 1000P	2	
C503		ECUM1C105ZFN	C.CAPACITOR 16V 1U	1	
C504-08		ECUM1H103ZFN	C.CAPACITOR CH 50V 0.01U	5	
C509		ECUM1H332KBN	C.CAPACITOR CH 50V 3300P	1	
C510,11		ECUM1H104ZFN	C.CAPACITOR 50V 0.1U	2	
C512		ECUM1H102KBN	C.CAPACITOR CH 50V 1000P	1	
C513		ECUM1H104ZFN	C.CAPACITOR 50V 0.1U	1	
C514		ECUM1H103ZFN	C.CAPACITOR CH 50V 0.01U	1	
C515,16		ECUM1C474ZFN	C.CAPACITOR 16V 0.47U	2	
C517,18		ECUM1H103ZFN	C.CAPACITOR CH 50V 0.01U	2	
C519,20		ECUM1C474ZFN	C.CAPACITOR 16V 0.47U	2	
C521		ECUM1H103ZFN	C.CAPACITOR CH 50V 0.01U	1	
C522		ECUM1H102KBN	C.CAPACITOR CH 50V 1000P	1	
C524		ECUM1H103ZFN	C.CAPACITOR CH 50V 0.01U	1	
C526		VCEA0JAC221	E.CAPACITOR 6.3V 220U	1	
C531		ECUM1H330JCN	C.CAPACITOR CH 50V 33P	1	
C532		ECUM1H560JCN	C.CAPACITOR CH 50V 56P	1	
C533,34		ECUM1H121JCN	C.CAPACITOR CH 50V 120P	2	
C535		ECUM1H103ZFN	C.CAPACITOR CH 50V 0.01U	1	
C536		ECUM1H104ZFN	C.CAPACITOR 50V 0.1U	1	
C537		ECUM1H103ZFN	C.CAPACITOR CH 50V 0.01U	1	
C538,39		ECUM1H680JCN	C.CAPACITOR CH 50V 68P	2	
C540		ECEA1CK220	E.CAPACITOR 16V 22U	1	
C551		ECUM1H102KBN	C.CAPACITOR CH 50V 1000P	1	
C552-54		ECUM1H103ZFN	C.CAPACITOR CH 50V 0.01U	3	
C555		ECEA0JPK221	E.CAPACITOR 6.3V 220U	1	
C556,57		ECUM1H103ZFN	C.CAPACITOR CH 50V 0.01U	2	
C558		ECEA0JPK470	E.CAPACITOR 6.3V 47U	1	
C559		ECUM1C105ZFN	C.CAPACITOR 16V 1U	1	
C560,61		ECUM1H471KBN	C.CAPACITOR CH 50V 470P	2	
C562,63		ECUM1H101JCN	C.CAPACITOR CH 50V 100P	2	
C564		ECUM1C105ZFN	C.CAPACITOR 16V 1U	1	
C565		ECUM1H101JCN	C.CAPACITOR CH 50V 100P	1	
C566		ECUM1H104ZFN	C.CAPACITOR 50V 0.1U	1	
			INTEGRATED CIRUICTS		
IC501		AN3337NSB	IC	1	
IC502		AN3370K	IC	1	
IC551		BA7743FS	IC	1	
			COILS		
L501-03		VLQ0188K330	COIL 33UH	3	
L504		VLQ0188J5R6	COIL 5.6UH	1	
L511-14		VLQ0555	COIL	4	
L515,16		ERJ8GEY0R00	M.RESISTOR CH 1/8W 0	2	
L551,52		VLQ0188K330	COIL 33UH	2	
			CONNECTORS		

Ref.No.		Part No.	Part Name & Description	Pcs	Remarks
P501		VJP1394T	CONNECTOR (MALE)	1	
P502		VJS2603	CONNECTOR (FEMALE)	1	
P551		VJP1248T	CONNECTOR (MALE) 8P	1	
			TRANSISTORS		
Q501		MSB709	TRANSISTOR	1	
Q502		MSD601	TRANSISTOR	1	
			RESISTORS		
R501		ERJ6GMYJ101	M.RESISTOR CH 1/10W 100	1	
R502		ERJ6GMYJ152	M.RESISTOR CH 1/10W 1.5K	1	
R503		ERJ6GMYG752	M.RESISTOR CH 1/10W 7.5K	1	
R504		ERJ6GMYJ333	M.RESISTOR CH 1/10W 33K	1	
R505		ERJ6GMYJ182	M.RESISTOR CH 1/10W 1.8K	1	
R506		ERJ6GEYJ562	M.RESISTOR CH 1/10W 5600	1	
R507		ERJ6GMYJ391	M.RESISTOR CH 1/10W 390	1	
R508		ERJ6GMYJ331	M.RESISTOR CH 1/10W 330	1	
R509-12		ERJ6GMYJ470	M.RESISTOR CH 1/10W 47	4	
R517		ERJ6GMYJ100	M.RESISTOR CH 1/10W 10	1	
R518,19		ERJ6GMYJ101	M.RESISTOR CH 1/10W 100	2	
R520		ERJ6GMYJ152	M.RESISTOR CH 1/10W 1.5K	1	
R521,22		ERJ6GMYJ822	M.RESISTOR CH 1/10W 8.2K	2	
R523		ERJ6GMYJ152	M.RESISTOR CH 1/10W 1.5K	1	
R524		VRE0034E182	M.RESISTOR CH 1/10W 1.8K	1	
R525		VRE0034E103	M.RESISTOR CH 1/10W 10K	1	
R526		ERJ6GMYG133	M.RESISTOR CH 1/10W 13K	1	
R527		ERJ6GMZ0R00	M.RESISTOR CH 1/10W 0	1	
R529		ERJ6GMZ0R00	M.RESISTOR CH 1/10W 0	1	
R551		ERJ6GMYJ473	M.RESISTOR CH 1/10W 47K	1	
R552		ERJ6GMYJ391	M.RESISTOR CH 1/10W 390	1	
R553		ERJ6GMYJ273	M.RESISTOR CH 1/10W 27K	1	
R554		ERJ6GMYJ243	M.RESISTOR CH 1/10W 24K	1	
R556		ERJ6GMYJ333	M.RESISTOR CH 1/10W 33K	1	
R557		ERJ6GMYJ103	M.RESISTOR CH 1/10W 10K	1	
R558		ERJ6GMYJ332	M.RESISTOR CH 1/10W 3.3K	1	
R559,60		ERJ6GMYJ152	M.RESISTOR CH 1/10W 1.5K	2	
R561		ERJ6GMYJ332	M.RESISTOR CH 1/10W 3.3K	1	
R562		ERJ6GMYJ102	M.RESISTOR CH 1/10W 1K	1	
R563		VRE0034E100	M.RESISTOR CH 1/10W 10	1	
R564		ERJ6GMYJ224	M.RESISTOR CH 1/10W 220K	1	
R565		ERJ6GMYJ473	M.RESISTOR CH 1/10W 47K	1	
R566		ERJ6GMYJ273	M.RESISTOR CH 1/10W 27K	1	
R567		ERJ6GMYJ153	M.RESISTOR CH 1/10W 15K	1	
			MISCELLANEOUS		
		VSC3477	SHIELD COVER (TOP)	1	
		VSC3478	SHIELD COVER (MAIN)	1	
		VSC3479	SHIELD COVER (BOTTOM)	1	
	■	VEP07674B	TIMER C.B.A.		(NLA)
			CAPACITORS		
C7501		ECRHA030E41	TRIMMER 3P	1	
C7502		ECEA0JK470	E.CAPACITOR 6.3V 47U	1	
C7503		ECUM1H220JCN	C.CAPACITOR CH 50V 22P	1	
C7504		ECUM1H330JCN	C.CAPACITOR CH 50V 33P	1	
C7505		ECEA1VK100	E.CAPACITOR 35V 10U	1	
C7506		ECUM1H050DCN	C.CAPACITOR CH 50V 5P	1	
C7507		ECEA0JK221	E.CAPACITOR 6.3V 220U	1	
C7508,09		ECUM1H104ZFN	C.CAPACITOR 50V 0.1U	2	
C7511,12		ECUM1H104ZFN	C.CAPACITOR 50V 0.1U	2	
C7513		ECEA0JK470	E.CAPACITOR 6.3V 47U	1	
C7514,15		ECUM1H103ZFN	C.CAPACITOR CH 50V 0.01U	2	
C7516		ECUM1H821KBN	C.CAPACITOR CH 50V 820P	1	
C7517		ECUM1H221JCN	C.CAPACITOR CH 50V 220P	1	

Ref.No.		Part No.	Part Name & Description	Pcs	Remarks
C7518,19		ECEA1EK4R7	E.CAPACITOR 25V 4.7U	2	
C7520		ECUM1E223KBN	C.CAPACITOR CH 25V 0.022U	1	
C7521		ECEA0JK330	E.CAPACITOR 6.3V 33U	1	
C7522		ECUM1H104ZFN	C.CAPACITOR 50V 0.1U	1	
C7525,26		ECUM1H103ZFN	C.CAPACITOR CH 50V 0.01U	2	
C7527		ECUM1H820JCN	C.CAPACITOR CH 50V 82P	1	
C7528		ECQV1H224JZ	P.CAPACITOR 50V 0.22U	1	
C7529-41		ECUM1H270JCN	C.CAPACITOR CH 50V 27P	13	
			DIODES		
D7503		MA73	DIODE	1	
D7506,07		MA73	DIODE	2	
D7509		MA73	DIODE	1	
D7511		MA73	DIODE	1	
D7514		MA73	DIODE	1	
D7517,18		MA73	DIODE	2	
D7521		MA73	DIODE	1	
D7524		MA73	DIODE	1	
D7527		MA73	DIODE	1	
D7531,32		MA73	DIODE	2	
D7534		MA73	DIODE	1	
D7536,37		MA73	DIODE	2	
D7538		1SS254	DIODE	1	
D7539,40		MA73	DIODE	2	
D7541		MA3068	DIODE	1	
D7542		MA73	DIODE	1	
D7544,45		LN28RCPL	DIODE	2	
D7546		LN38GCPL	DIODE	1	
D7548,49		LN28RCPL	DIODE	2	
D7557		MA73	DIODE	1	
			DISPLAY TUBES		
DP7501		VSL0144	DISPLAY TUBE	1	
			INTEGRATED CIRCUITS		
IC7501		MN187164VLGT	IC	1	
IC7502		MN1280L	IC	1	
IC7503		MN1280S	IC	1	
IC7504		M34225V1AH	IC	1	
IC7505		M6M80021P	IC	1	
IC7506		BA6810F	IC	1	
			COILS		
L7501		ELESP221KA	COIL 220UH	1	
L7502		VLQ0188J101	COIL 100UH	1	
L7503		ELESQ101KA	COIL 100UH	1	
			CONNECTORS		
P7501		VJS3193B020A	CONNECTOR (FEMALE)	1	
P7502		VJS3193B018A	CONNECTOR (FEMALE)	1	
P7504		VJS2183	CONNECTOR (FEMALE)	1	
P7505		VJP2621	CONNECTOR (MALE)	1	
P7506		VJP3267A012W	CONNECTOR (MALE)	1	
			COMBINATION PARTS		
QR7501		MRN1404	TRANSISTOR	1	
QR7503,04		MRN2403	TRANSISTOR-RESISTOR	2	
QR7505		MRN2402	TRANSISTOR	1	
			RESISTORS		
R6701		ERJ6ENF1363	M.RESISTOR	1	
R7501		ERJ6GMYJ102	M.RESISTOR CH 1/10W 1K	1	
R7502		ERJ6GMYJ822	M.RESISTOR CH 1/10W 8.2K	1	
R7504		ERJ6GMYJ822	M.RESISTOR CH 1/10W 8.2K	1	
R7506,07		ERJ6GMYJ822	M.RESISTOR CH 1/10W 8.2K	2	
R7508		ERJ6GMYJ392	M.RESISTOR CH 1/10W 3.9K	1	
R7509,10		ERJ6GMYJ822	M.RESISTOR CH 1/10W 8.2K	2	
R7511-15		ERJ6GMYJ332	M.RESISTOR CH 1/10W 3.3K	5	

Ref.No.		Part No.	Part Name & Description	Pcs	Remarks
R7519-22		ERJ6GMYJ223	M.RESISTOR CH 1/10W 22K	4	
R7524		ERJ6GMYJ223	M.RESISTOR CH 1/10W 22K	1	
R7525-29		ERJ6GMYJ103	M.RESISTOR CH 1/10W 10K	5	
R7530		ERJ6GMYJ332	M.RESISTOR CH 1/10W 3.3K	1	
R7531		ERJ6GMYJ221	M.RESISTOR CH 1/10W 220	1	
R7532		ERJ6GMYJ332	M.RESISTOR CH 1/10W 3.3K	1	
R7533		ERJ6GMYJ224	M.RESISTOR CH 1/10W 220K	1	
R7534		ERJ6GMYJ331	M.RESISTOR CH 1/10W 330	1	
R7535		ERJ6GMYJ103	M.RESISTOR CH 1/10W 10K	1	
R7536		ERJ6GMYJ332	M.RESISTOR CH 1/10W 3.3K	1	
R7537-39		ERJ6GMYJ103	M.RESISTOR CH 1/10W 10K	3	
R7540		ERJ6GMYJ152	M.RESISTOR CH 1/10W 1.5K	1	
R7541		ERJ6GMYJ104	M.RESISTOR CH 1/10W 100K	1	
R7542		ERJ6GMYJ821	M.RESISTOR CH 1/10W 820	1	
R7543,44		ERJ6GMYJ473	M.RESISTOR CH 1/10W 47K	2	
R7545		ERJ6GMYJ102	M.RESISTOR CH 1/10W 1K	1	
R7546		ERJ6GMYG223	M.RESISTOR CH 1/10W 22K	1	
R7547		ERJ6GMYJ332	M.RESISTOR CH 1/10W 3.3K	1	
R7550		ERJ6GMYJ221	M.RESISTOR CH 1/10W 220	1	
R7552		ERJ6GMYJ221	M.RESISTOR CH 1/10W 220	1	
R7556		ERJ6GMYJ221	M.RESISTOR CH 1/10W 220	1	
R7558,59		ERJ6GMYJ221	M.RESISTOR CH 1/10W 220	2	
R7564		ERJ6GMYJ101	M.RESISTOR CH 1/10W 100	1	
R7565		ERJ6GMYJ332	M.RESISTOR CH 1/10W 3.3K	1	
R7571		ERJ6GMYJ272	M.RESISTOR CH 1/10W 2.7K	1	
R7572		ERJ6GMYJ101	M.RESISTOR CH 1/10W 100	1	
			COMBINATION PARTS		
RX7501		EXBF11E104J	COMBI.R-R	1	
RX7502		EXBF8E104J	COMBI.R-R	1	
			VARIABLE RESISTORS		
VR7501		EVNDXAA00B53	V.RESISTOR 5K	1	
			CRYSTAL OSCILLATORS		
X7501		VSX0094	CRYSTAL OSCILLATOR	1	
X7502		VSX0484	CRYSTAL OSCILLATOR	1	
X7503		EFOGC3584A5		1	
			MISCELLANEOUS		
		VMD1342	LED SPACER	1	
		VEK5789	IR RECEIVER UNIT	1	(NLA)(!>
		VJF0693	FIP HOLDER	1	
	■	VEP00S02B	VR C.B.A.		(NLA)
			CAPACITORS		
C6511		ECEA1CK330	E.CAPACITOR 16V 33U	1	
C6512		ECEA1AK330	E.CAPACITOR 10V 33U	1	
C6513		ECEA1EK3R3	E.CAPACITOR 25V 3.3U	1	
C6514,15		ECQB1H223JH	P.CAPACITOR 50V 0.022U	2	
C6516		ECEA1HK4R7	E.CAPACITOR 50V 4.7U	1	
C6517		ECKF1H103ZF	C.CAPACITOR 50V 0.01U	1	
C6518,19		ECQV1H124JS	P.CAPACITOR 50V 0.12U	2	
C6520		ECKF1H103ZF	C.CAPACITOR 50V 0.01U	1	
			DIODES		
D6501		LN21RCPHL	LED	1	
D6502,03		1SS254	DIODE	2	
D6511		1SS254	DIODE	1	

Ref.No.		Part No.	Part Name & Description	Pcs	Remarks
			INTEGRATED CIRCUTIS		
IC6511		VCR0172	IC	1	
			COILS		
L6501-03		VLP0083	FILTER	3	
L6511,12		ELESP471KA	COIL	2	
			CONNECTORS		
P6501		VJP3267A012W	CONNECTOR (MALE)	1	
P6511		VJP1252T	CONNECTOR (MALE) 12P	1	
P6512		VJP3042A007W	CONNECTOR (MALE)	1	
			RESISTORS		
R6501		ERDS2TJ271	C.RESISTOR 1/4W 270	1	
R6502		ERDS2TJ102	C.RESISTOR 1/4W 1K	1	
R6511		ERO S2CKG3301	M.RESISTOR 1/4W 3.3K	1	
R6512,13		ERO S2CKG2700	M.RESISTOR 1/4W 270	2	
R6514		ERO S2CKG3301	M.RESISTOR 1/4W 3.3K	1	
R6516		ERDS2TJ101	C.RESISTOR 1/4W 100	1	
R6518,19		ERO S2CKG3300	M.RESISTOR 1/4W 330	2	
			SWITCHES		
SW6501		EVQQS307K	SWITCH	1	
SW6502-04		ESD170206	SWITCH	3	
SW6505,06		ESD170306	SWITCH	2	
			VARIABLE RESISTORS		
VR6511		EWANYJX0554J	V.RESISTOR	1	
VR6512		EVUF3AE20B24	V.RESISTOR 20K	1	
VR6513		EVJY50E20C23	V.RESISTOR 2K	1	
			MISCELLANEOUS		
		KL-04	LED SPACER	1	
		VGU4537	SLIDE KNOB	5	
		VGU4495	REC VR KNOB	2	
		VYC0160	REC VR PANEL UNIT	1	
	■	VEP00S03A	MIC C.B.A.		(NLA)
			CAPACITORS		
C6301,02		ECUM1H103KBN	C.CAPACITOR CH 50V 0.01U	2	
			JACKS		
J6302		VJJ0274	MIC JACK	1	
J6401		VJJ0238	HEAD PHONE JACK	1	
			COILS		
L6301,02		ELESP221KA	COIL 220UH	2	
			CONNECTORS		
PS6301		VJS3042B007W	CONNECTOR (FEMALE)	1	

Ref.No.		Part No.	Part Name & Description	Pcs	Remarks
	■	VEP00S04A	FRONT INPUT C.B.A.		(NLA)
			CAPACITORS		
C4801,02		ECCF1H101JC	C.CAPACITOR 50V 100P	2	
C4803,04		ECQV1H104JZ	P.CAPACITOR 50V 0.1U	2	
			COILS		
L4801,02		VLQ0188J101	COIL 100UH	2	
			CONNECTORS		
P4801		VJP2622	CONNECTOR (MALE)	1	
P4802		VJP3103	CONNECTOR (MALE)	1	
			RESISTORS		
R4801		ERDS2TJ750	C.RESISTOR 1/4W 75	1	
R4802,03		ERDS2TJ222	C.RESISTOR 1/4W 2.2K	2	
			MISCELLANEOUS		
		VEJ1236	FRONT JACK PLATE	1	
		VSC3623	FRONT JACK SHIELD COVER	1	
	■	VEP00S33B	JOG C.B.A.		(NLA)
			DIODES		
D6702		LN38GCPP	LED	1	
D6704,05		LN38GCPP	LED	2	
			CONNECTORS		
P6701		VJS2621	CONNECTOR (FEMALE)	1	
			RESISTORS		
R6702		ERDS2T0	C.RESISTOR 1/4W 0	1	
R6706,07		ERDS2TJ271	C.RESISTOR 1/4W 270	2	
R6709		ERDS2TJ271	C.RESISTOR 1/4W 270	1	
			SWITCHES		
SW6701		EVQQS307K	SWITCH	1	
			MISCELLANEOUS		
		KL-02	LED SPACER	3	
		VSQ0798	JOG ENCODER	1	
	■	VEP01487A	POWER C.B.A.		(NLA)<!>
			CAPACITORS		
C1101		ECQU2A154MNB	P.CAPACITOR 250V 0.15U	1	<!>
C1102		ECQU2A104MN	P.CAPACITOR 250V 0.01U	1	<!>
C1103		ECES2GG680	CAPACITOR	1	
C1106		VCC0021	C.CAPACITOR	1	<!>

Ref.No.		Part No.	Part Name & Description	Pcs	Remarks
C1107		ECQE6473KF	P.CAPACITOR 50V	1	
C1108		VCK0106K121	CAPACITOR	1	
C1109		ECA1VXLV470	E.CAPACITOR 35V 47U	1	
C1110		ECA1CXLV101	E.CAPACITOR 16V 100U	1	
C1111		ECEA1JFE470	E.CAPACITOR 63V 47U	1	
C1112		ECEA1CFE560	E.CAPACITOR 16V 56U	1	
C1113,14		ECEA1DFZ681	E.CAPACITOR 20V 680U	2	
C1115,16		ECEA1AFZ681	E.CAPACITOR 10V 680U	2	
C1117		ECQB1H103JF	P.CAPACITOR 50V 0.01U	1	
C1118		ECKF1H102KB	C.CAPACITOR 50V 1000P	1	
C1119		VCF2AAC101JT	P.CAPACITOR	1	
C1120		ECKF1H391KB	C.CAPACITOR 50V 390P	1	
C1121		ECKF1H102KB	C.CAPACITOR 50V 1000P	1	
C1133		VCC0021	C.CAPACITOR	1	<!>
C1136		VCC0022	C.CAPACITOR 1000P	1	<!>
			DIODES		
D1102		S1WBA60S	DIODE	1	<!>
D1103		AP01C	DIODE	1	
D1104		MA4200H	DIODE	1	
D1105		MA723VT	DIODE	1	
D1106		MA178	DIODE	1	
D1107		AU01Z	DIODE	1	
D1108		MA185	DIODE	1	
D1109		30DF2	DIODE	1	
D1110		31DQ04	DIODE	1	
			INTEGRATED CIRCUITS		
IC1101		STRS6545LF	IC	1	<!>
IC1102		SI3120C	IC	1	
IC1103		UPC1093J	IC	1	
			COILS		
L1101		ELF18D221F	COIL 220UH	1	<!>
L1102,03		VLQ0410	COIL	2	
L1104,05		ELESE101KA	COIL 100UH	2	
L1106		VLP0074	COIL	1	
L1107		VLP0083	COIL	1	
L1111		ELF18D290A	COIL	1	<!>
L1112-15		VLP0085	COIL	4	
			CONNECTORS		
P1101		VJS2625	CONNECTOR (FEMALE)	1	<!>
P1102		VJP1250T	CONNECTOR (MALE) 10P	1	
			TRANSISTORS		
Q1101		PS2561L1	TRANSISTOR	1	<!>
			RESISTORS		
R1101		ERO S2CKG3001	M.RESISTOR 1/4W 3K	1	
R1102		ERG3SJ683	M.RESISTOR 3W 68K	1	
R1103		ERDS2TJ224	C.RESISTOR 1/4W 220K	1	
R1104		ERDS2FJ221	C.RESISTOR 1/4W 220	1	
R1105		ERDS2TJ101	C.RESISTOR 1/4W 100	1	
R1106		ERDS2TJ561	C.RESISTOR 1/4W 560	1	
R1107		ERW1PK1R5	W.RESISTOR 1W	1	
R1108		ERDS2TJ561	C.RESISTOR 1/4W 560	1	
R1109		ERDS2TJ271	C.RESISTOR 1/4W 270	1	
R1110		ERO S2CKG2701	M.RESISTOR 1/4W 2.7K	1	
R1111		ERDS2TJ272	C.RESISTOR 1/4W 2.7K	1	
R1112		ERO S2CKG2401	M.RESISTOR 1/4W 2.4K	1	
R1113		ERO S2CKG3302	M.RESISTOR 1/4W 33K	1	
R1114		ERDS2TJ682	C.RESISTOR 1/4W 6.8K	1	
R1115		ERDS2TJ471	C.RESISTOR 1/4W 470	1	
R1116		ERO S2CKG62R0	M.RESISTOR 62	1	
R1117		ERDS2TJ103	C.RESISTOR 1/4W 10K	1	
R1131		ERW1PK2R2	W.RESISTOR 1W	1	
R1132		ERC12AGM334	S.RESISTOR 1/2W 330K	1	<!>
R1133		ERDS2TJ224	C.RESISTOR 1/4W 220K	1	

Ref.No.		Part No.	Part Name & Description	Pcs	Remarks
			TRANSFORMERS		
T1101		VLT0657	TRANSFORMER	1	<!>
			MISCELLANEOUS		
		VJF0318	FUSE HOLDER	1	<!>
		VSC3487	HEAT SINK	1	FOR IC1101
		VMC0811	HEAT SINK SPRING	1	FOR IC1101
		VMZ1184	CAPACITOR COVER	3	<!>FOR C1106,33,36
	■	VEX0117	CYLINDER DRIVE C.B.A.		(NLA)
			CAPACITORS		
C2901-03		ECEA1VSN2R2	E.CAPACITOR 35V 2.2U	3	
C2904-06		ECUM1E104KBM	C.CAPACITOR CH 25V 0.1U	3	
C2907		ECUM1E683KBM	C.CAPACITOR CH 25V 0.068U	1	
C2908		ECUM1E473KBM	C.CAPACITOR CH 25V 0.047U	1	
C2909		ECQV1H104JS	P.CAPACITOR 50V 0.1U	1	
C2910,11		ECEA1CKS100	E.CAPACITOR 16V 10U	2	
C2912		ECEA0JKS220	E.CAPACITOR 6.3V 22U	1	
			INTEGRATED CIRCUITS		
IC2901		AN3815K	IC	1	
			CONNECTORS		
P2901		VJP2603W	CONNECTOR (MALE)	1	
P2902		VJP1232T	CONNECTOR (MALE) 5P	1	
			RESISTORS		
R2901		ERX12SJR47	M.RESISTOR 1/2W 0.47	1	
			HEATERS		
TH2901		VRH0017	HEATER	1	
			MISCELLANEOUS		
		VMA8089	MAIN HOLDER	1	
	■	VXA3825	MECHANISM CONNECTION C.B.A.		(NLA)
			MISCELLANEOUS		
		ON2170-RLF	PHOTO INTERRUPTER	2	
		VJS1493	FLEXIBLE CARD 15P	1	
		VMA7829	REINFORCEMENT (F)	1	
		VMA7830	REINFORCEMENT (R)	1	
		VMZ1366	PROTECTION SHEET	1	
	■	VEP00K88C	FE HEAD C.B.A.		(NLA)

Ref.No.		Part No.	Part Name & Description	Pcs	Remarks
			CAPACITORS		
C1401		ECEA1CK100	E.CAPACITOR 16V 10U	1	
			COMBINATION PARTS		
CR1401		EXED1032333	CAPACITOR-RESISTORS	1	
			TRANSISTORS		
Q1401		2SD1991-R	TRANSISTOR	1	
			MISCELLANEOUS		
		EIQ7QFD12Q	COIL	1	
		ECQB1H333KZ	P.CAPACITOR 50V 0.033U	1	
		ECQB1H472JZ	P.CAPACITOR 50V 4700P	1	
		VLQ0188J101	COIL 100UH	1	
		VJP1148	CONNECTOR(MALE)(2.5MM) 2P	1	
	■	VEP00P61A	INTERFACE C.B.A.		(NLA)
			MISCELLANOUES		
		VJP1244T	ANGLE 4P	1	
		VLP0083	FERRITE COIL	2	
	■	VEK3578	PHOTO Tr. (S) C.B.A.		(NLA)
			MISCELLANEOUS		
		VMD0645	HOLDER	1	
		PN150NVS	TRANSISTOR	1	
		ECKF1H102KB	CERAMIC CAPACITOR 50V 1000P	1	
	■	-------	PHOTO Tr. (T) C.B.A.		(NLA)
			MISCELLANEOUS		
		VMD0645	HOLDER	1	
		ECKF1H102KB	CERAMIC CAPACITOR 50V 1000P	1	
		ERDS2TJ222	C.RESISTOR 1/4W 2.2K	1	
		VJS2165W	ZIF CONNECTOR 6P	1	
		PN150NVS	TRANSISTOR	1	